DESENHOS

MEP PELLEGRINI MARINE EQUIPMENTS

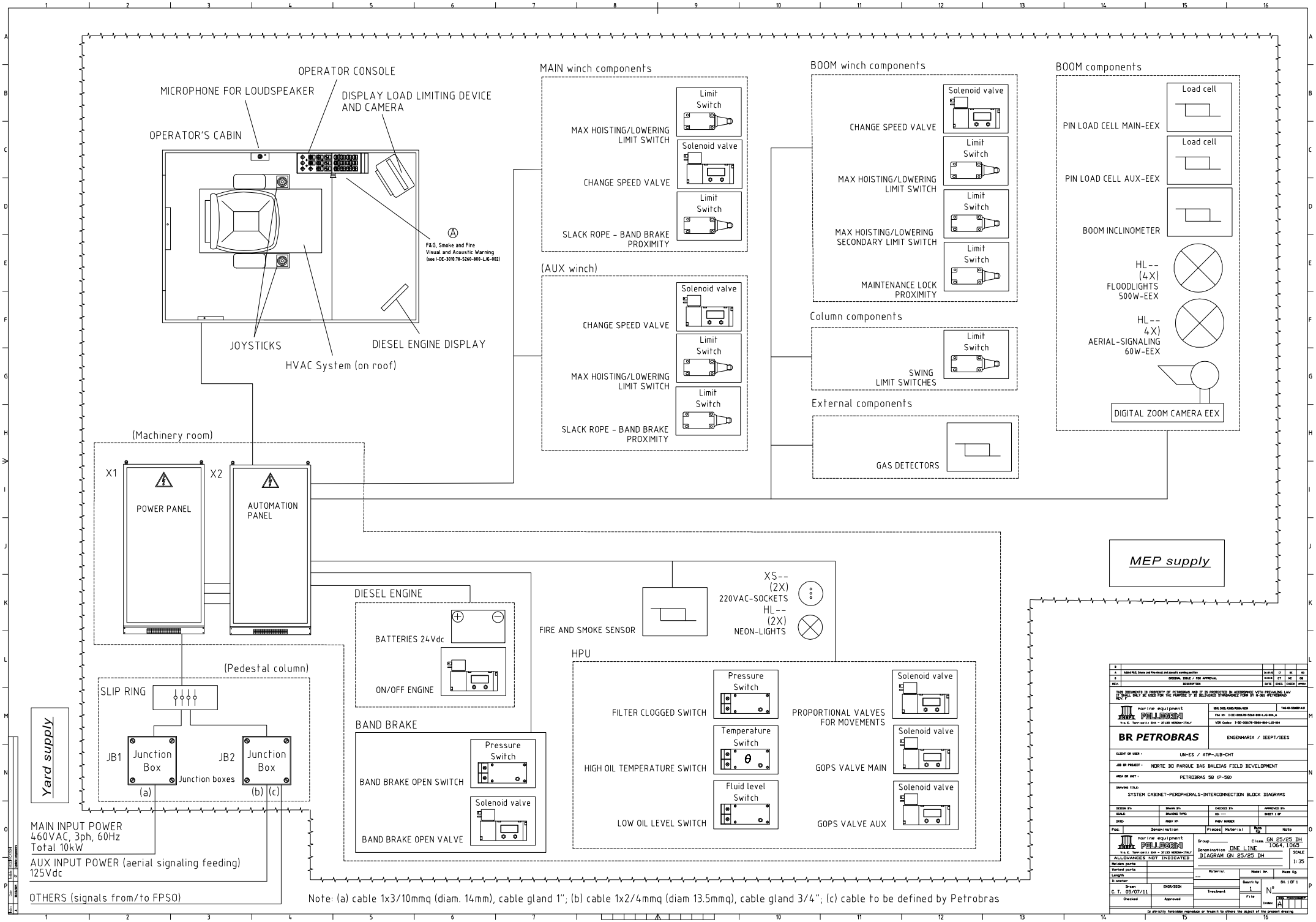

Note: (a) cable 1x3/10mmq (diam. 14mm), cable gland 1"; (b) cable 1x2/4mmq (diam 13.5mmq), cable gland 3/4"; (c) cable to be defined by Petrobras

REV.	DESCRIPTION	DATE	EXEC.	CHECK	APPROV.
B					
A	Added F&G, Smoke and Fire visual and acoustic warning position	26.01.12	CT	RE	GO
B	ORIGINAL ISSUE / FOR APPROVAL	09-04-12	CT	MC	GO

THIS DOCUMENTS IS PROPERTY OF PETROBRAS AND IT IS PROTECTED IN ACCORDANCE WITH PREVAILING LAW IT SHALL ONLY BE USED FOR THE PURPOSE IT IS DELIVERED STANDARDIZE FORM BY N-381 (PETROBRAS) REV. F

marine equipment PELLEGRIN
Via E. Torricelli 8/A - 37135 VERONA-ITALY

SERIAL CODE: A2000/A2004/A2009 — TAG NO: 5260-001-A/B
File N°: I-DE-3010.78-5260-800-LJG-004_A
VDR Codes: I-DE-3010.78-5260-800-LJG-004

BR PETROBRAS — ENGENHARIA / IEEPT/IEES

CLIENT OR USER: UN-ES / ATP-JUB-CHT
JOB OR PROJECT: NORTE DO PARQUE DAS BALEIAS FIELD DEVELOPMENT
AREA OR UNIT: PETROBRAS 58 (P-58)
DRAWING TITLE: SYSTEM CABINET-PEROPHERALS-INTERCONNECTION BLOCK DIAGRAMS

DESIGN BY:	DRAWN BY:	CHECKED BY:	APPROVED BY:
SCALE:	DRAWING TYPE:	CO: ---	SHEET 1 OF
DATE:	PROV N°:	PROV NUMBER	

Pos.	Denomination	Pieces	Material	Mass. Kg.	Note

marine equipment PELLEGRIN
Via E. Torricelli 8/A - 37135 VERONA-ITALY

Group ____ Class: GN 25/25 DH 1064, 1065
Denomination: ONE LINE DIAGRAM GN 25/25 DH
SCALE 1:35

ALLOWANCES NOT INDICATED
Maximum parts
Worked parts
Length
Diameter
Material
Model Nr.
Mass Kg.
Quantity 1
Sh. 1 OF 1
Drawn C.T. 05/07/11
ENGR/DSGN
Checked
Approved
Treatment
File
N°
Index A
REV. PROVISIONAL

Is strictly forbidden reproduce or transmit to others the object of the present drawing

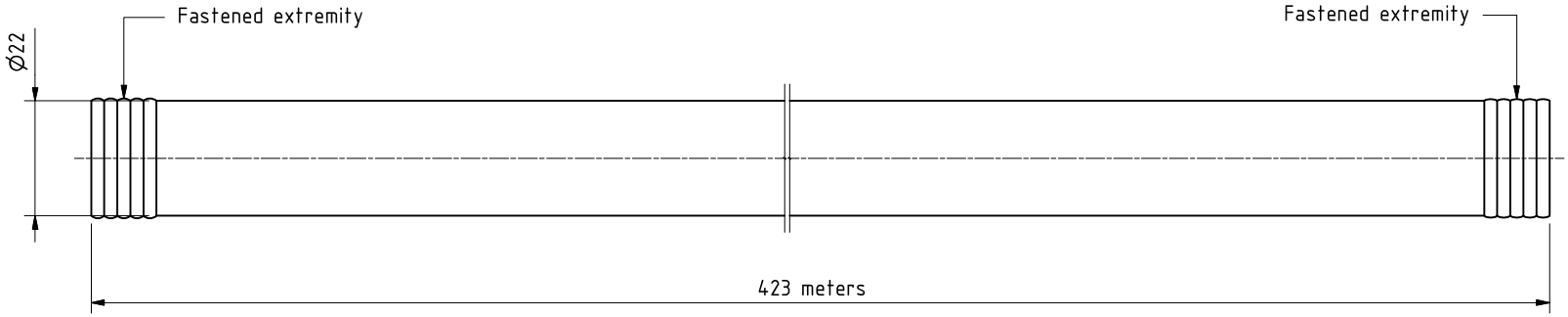

WIRE ROPE 35(W)x7+IWRC NON-ROTATING ROPE

- MAX WIRE ROPE LOAD 65,5 kN
- MBL > 342 kN
- TESTING D.N.V.

Pos.	Denomination	Pieces	Material	Mass kg	Note

marine equipment
PELLEGRINI
Via E. Torricelli 2/A - 37135 VERONA - Italy

ALLOWANCES NOT INDICATED	
Melden parts	
Worked parts	
Lenght	
Diameter	
Drawn: 22/03/11	ENGR/DSGN
Checked	Approved

Group 250 Class. GN 25/25 DH
No. 1064,1065
Denomination WIRE ROPE D.22
MAIN HOIST
SCALE 1:1

Material: SIRTEF	Model Nr.	Mass kg: 875.600	
Treatment: GALVANIZED STEEL	Quantity: 1	Sh. 1 of 1	
	File: 2500882-A	N°250/0882	
		MOD. PO0DT002MEP	
		Index	

It is strictly forbidden to reproduce or transmit to others the object of the present drawing.

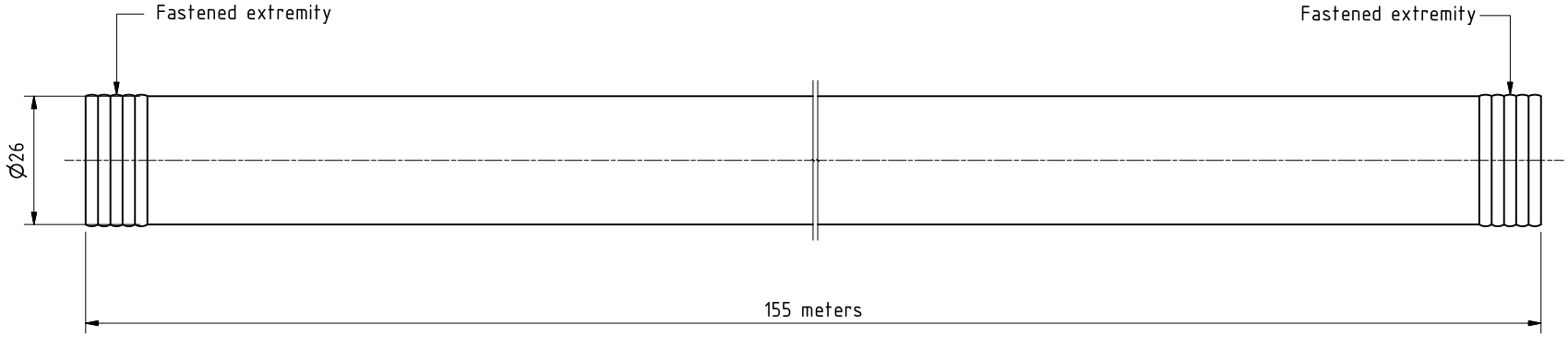

WIRE ROPE 35(W)x7 +IWRC NON-ROTATING ROPE

- MAX WIRE ROPE LOAD 78 kN
- MBL > 463 kN
- TESTING D.N.V.

Pos.	Denomination	Pieces	Material	Mass kg	Note

marine equipment PELLEGRINI
Via E. Torricelli 2/A - 37135 VERONA - Italy

ALLOWANCES NOT INDICATED

Melden parts	
Worked parts	
Lenght	
Diameter	

Drawn	ENGR/DSGN
22/03/11	
Checked	Approved

Group 250 Class. GN 25/25 DH
No. 1064,1065
Denomination WIRE ROPE D.26
AUXILIARY HOIST

SCALE 1:1

Material	Model Nr.	Mass kg
SIRTEF		452.800
GALVANIZED STEEL	Quantity 1	Sh. 1 of 1
Treatment	File 2500883-A	N°250/0883
	Index	MOD. PO0DT002MEP

It is strictly forbidden to reproduce or transmit to others the object of the present drawing.

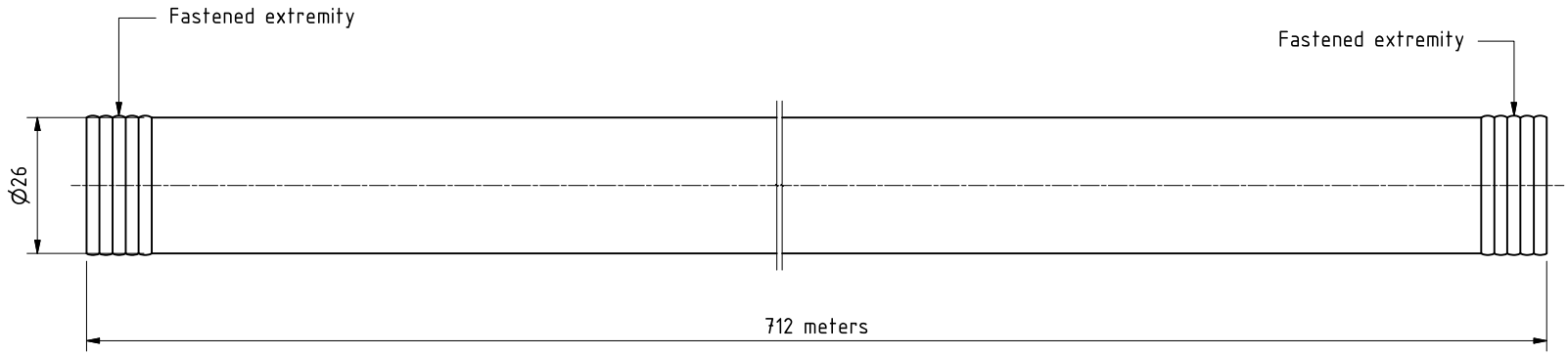

WIRE ROPE 8x36+IWRC NOT RESISTANT TO ROTATION

- MAX WIRE ROPE LOAD 72 kN
- MBL > 411 kN
- TESTING D.N.V.

Pos.	Denomination	Pieces	Material	Mass kg	Note

marine equipment
PELLEGRINI
Via E. Torricelli 2/A - 37135 VERONA - Italy

Group 250 Class. GN 25/25 DH
No. 1064,1065
Denomination WIRE ROPE D.26
BOOM HOIST

SCALE 1:1

ALLOWANCES NOT INDICATED

Melden parts	
Worked parts	
Lenght	
Diameter	

Drawn	ENGR/DSGN
08/02/11	
Checked	Approved

Material: SIRTEF
GALVANIZED STEEL
Treatment:

Model Nr.:
Mass kg: 2264.000
Quantity: 1
File: 2500958-A

Sh. 1 of 1
N°250/0958
MOD. PO0DT002MEP
Index

It is strictly forbidden to reproduce or transmit to others the object of the present drawing.

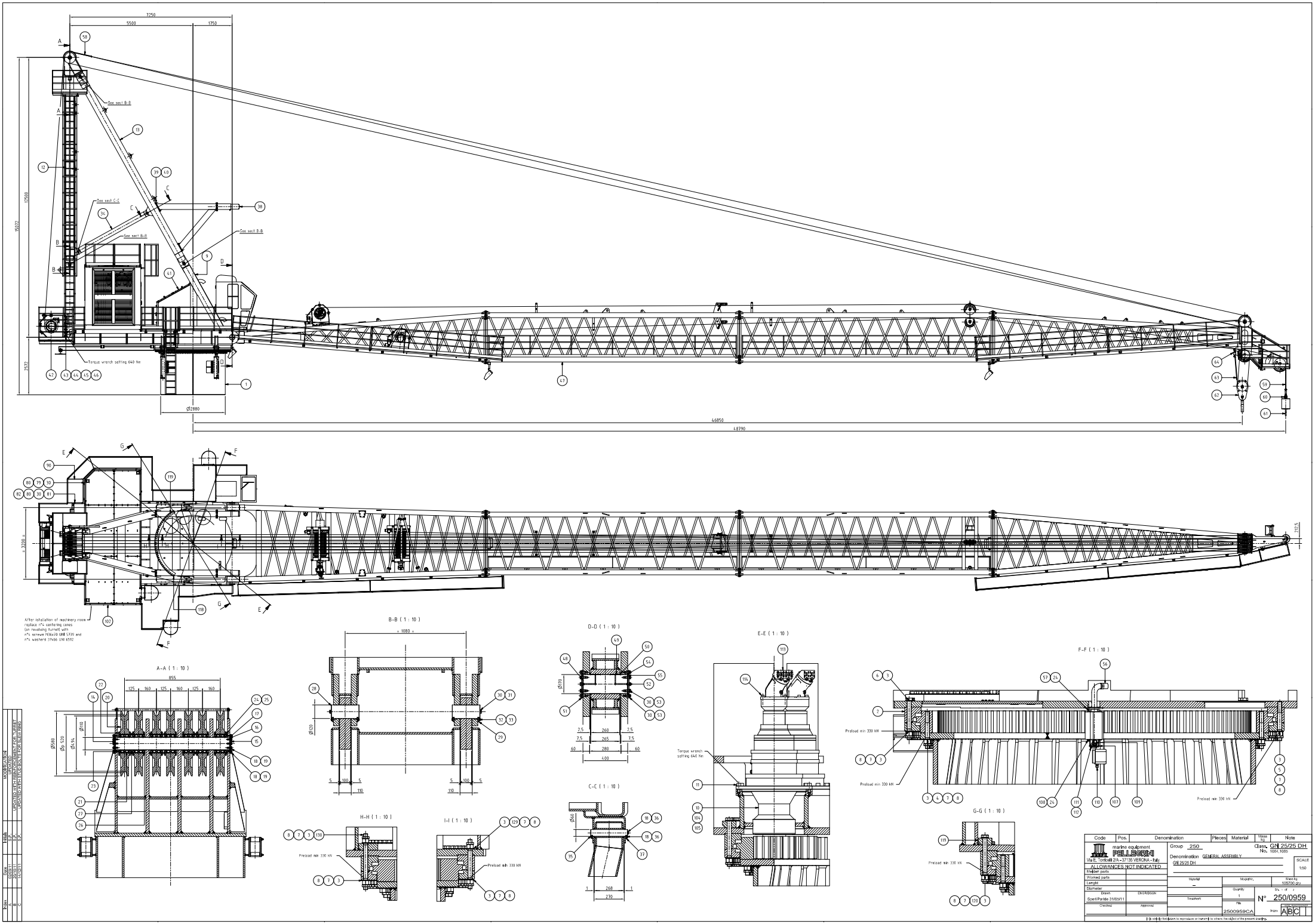

7250
5500
1750
See sect B-B
See sect C-C
See sect B-B
See sect B-B
Torque wrench setting 640 Nm
15072
17500
7572
Ø2880
46850
48790
After installation of machinery room replace n°4 centering cones (on revolving turret) with n°4 screws M16x70 UNI 5739 and n°4 washers 37x66 UNI 6592
A-A (1 : 10)
B-B (1 : 10)
D-D (1 : 10)
E-E (1 : 10)
F-F (1 : 10)
C-C (1 : 10)
G-G (1 : 10)
H-H (1 : 10)
I-I (1 : 10)
Preload min 330 kN
Torque wrench setting 640 Nm
Preload min 330 kN
Preload min 330 kN
Preload min 330 kN
Preload min 330 kN
Preload min 330 kN
Code
Pos.
Denomination
Pieces
Material
Mass kg
Note
marine equipment
PELLEGRINI
Via E. Tortorelli 2/A - 37135 VERONA - Italy
ALLOWANCES NOT INDICATED
Group 250
Class. GN 25/25 DH
No. 1064, 1065
Denomination GENERAL ASSEMBLY
GN 25/25 DH
SCALE 1:50
Material
Quantity
Sheet 1 of 2
N° 250/0959
Drawn Sperl Paride 31/05/11
Checked
Approved
Treatment
File 2500959CA
Index A B C
This copy forbidden to reproduce or transmit to others the object of the present drawing.

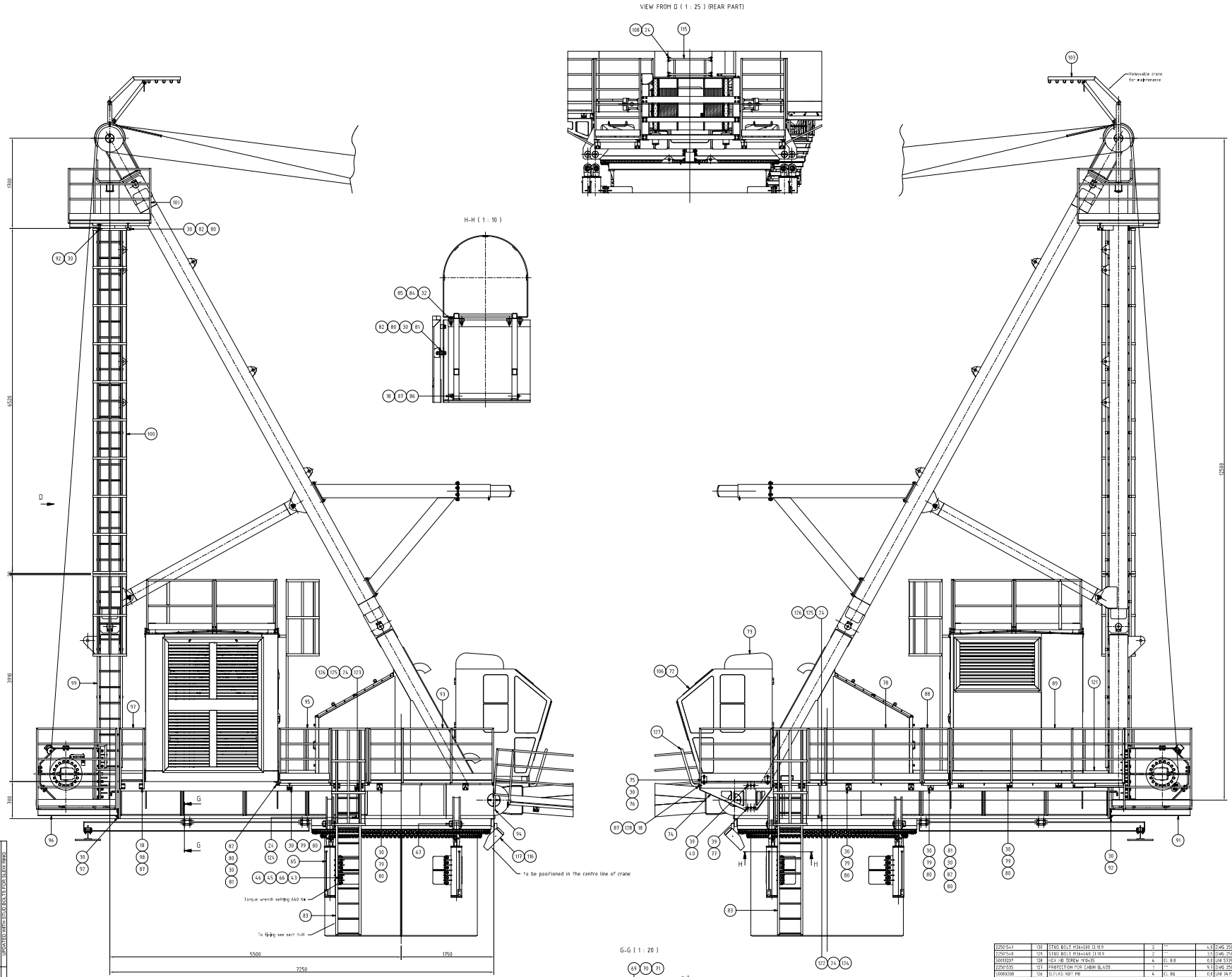

Code	Pos.	Denomination	Pieces	Material	Weight kg	Note
22581423	116	FIXED LIGHT SUPPORT (MOD. NUOVA ASP SPAR 250 MT)	1	--	3,2	DWG 250/1423
22581099	115	REAR HANDRAIL FOR TURRET	1	--	12,6	DWG 250/1099
5001-0360	114	HEX SEN CAP SCREW M16x50	10	Cl. 8.8	0,1	UNI 5931
	113	HYDRAULIC MOTOR A2FM107/61W-VZB100	3	REXROTH BOSCH GROUP	32,0	
50031083	112	HEX HD SCREW M8x16	3	Cl. 8.8	0,0	UNI 5739
50080406	111	WASHER 8,4x12,5	3	STEEL	0,0	UNI 6592
	110	LIMIT SWITCH GF4C 01.9	1	T.E.R.	1,0	
	109	FLEXIBLE H JOINT	1	GERIT Trasmissioni	8,1	CDD.5802
50031083	108	HEX HD SCREW M8x16	20	Cl. 8.8	0,0	UNI 5739
22581252	107	LIMIT SWITCH SUPPORT	1	--	1,0	DWG 250/1252
	106	WINDSHIELD WIPER BLADE FOR CABIN	1			
	105	GASKETS KIT FOR SLEWING DRIVE	3			
	104	GASKETS KIT FOR SLEWING GEAR BOX + BRAKE	3			
21580332	103	SPECIAL TOOLS MAINTENANCE CRANE STRUCTURE	1		40,5	DWG 150/8372
22581036	102	MACHINERY ROOM GENERAL ASSEMBLY	1	--	6806,4	DWG 250/1036
22581195	101	WALKWAY ON GANTRY CRANE	1	--	280,0	DWG 250/1195
22581193	100	LADDER	1	--	168,3	DWG 250/1193
22581194	99	LADDER	1	--	78,5	DWG 250/1194
50012088	98	HEX HD SCREW M10x40	8	Cl. 8.8	0,0	UNI 5739
22581192	97	HANDRAIL	1	--	12,2	DWG 250/1192
22581189	96	REAR WALKWAY TURRET	1	--	146,3	DWG 250/1189
22581184	95	RIGHT WALKWAY TURRET	1	--	216,4	DWG 250/1184
22581096	94	LADDER FOR WALKWAY	1	--	6,0	DWG 250/1096
22581095	93	RIGHT WALKWAY TURRET	1	--	93,8	DWG 250/1095
50013154	92	HEX HD SCREW M16x50	24	Cl. 8.8	0,1	UNI 5739
22581183	91	REAR WALKWAY TURRET	1	--	148,3	DWG 250/1183
22581181	90	LEFT WALKWAY TURRET	1	--	62,2	DWG 250/1181
22581180	89	LEFT WALKWAY TURRET	1	--	147,1	DWG 250/1180
22581171	88	LEFT WALKWAY TURRET	1	--	83,9	DWG 250/1171
50080218	87	SLIFKO NUT M18	16	Cl. 8G	0,0	UNI 7473
50013236	86	HEX HD SCREW M18x80	4	Cl. 8.8	0,1	UNI 5739
50080232	85	SLIFKO NUT M12	16	Cl. 8G	0,0	UNI 7473
50013268	84	HEX HD SCREW M12x50	16	Cl. 8.8	0,1	UNI 5739
22581161	83	ACCESS LADDER	2	--	137,0	DWG 250/1161
50013362	82	HEX HD SCREW M16x60	24	Cl. 8.8	0,1	UNI 5739
21580686	81	SPACER	17	S235 JR EN10027-1	0,1	DWG 150/8686
50080216	80	SLIFLKO NUT M16	85	Cl. 8G	0,0	UNI 7473
50013366	79	HEX HD SCREW M16x50	60	Cl. 8.8	0,1	UNI 5739
22581094	78	LEFT WALKWAY TURRET	1	--	115,5	DWG 250/1094
50013461	77	HEX HD SCREW M24x55	3	Cl. 8.8	0,2	UNI 5739
50013351	76	HEX HD SCREW M16x35	12	Cl. 8.8	0,1	UNI 5739
22581092	75	CABIN SPACER	4	S235 JR EN10027-1	7,3	DWG 250/1092
21580319	74	CABIN SUPPORT	1		192,8	DWG 150/9319
56302554	73	ROOF AIR CONDITIONER RHG 46-5 + HEATING	1	COMM.	0,0	
22581091	72	OPERATOR CABIN	1	--	1000,0	DWG 250/1091
50080221	71	SELF LOCKING NUT BG M20X1,5	16	Cl. 8G	0,1	UNI 7473
21580698	70	SPACER	16	S235 JR EN10027-1	0,0	DWG 150/8698
51804701	69	ROLLER KRV47SK	16	SKF	0,6	
22581135	68	SLEW RING REPLACEMENT	1	--	349,3	DWG 250/1135
22581208	67	PIN FOR CYLINDER SLEW RING REPLACEMENT	4	--	6,3	DWG 250/1208
50080538	66	HEX HD SCREW M24x180	48	Cl. 8.8	0,5	UNI 5737
22581133	65	CYLINDER FOR SLEW RING REPLACEMENT	4	--	193,5	DWG 250/1133
	64	WEDGE SOCKETS S=4,2/1 7/8	1	CROSBY	9,8	
22580882	63	WIRE ROPE D.22 MAIN HOIST	1	SWITEF	875,6	DWG 250/0882
22580742	62	BLOCK ASSEMBLY BWL 25 1	1	--	856,7	DWG 250/0742
	61	OVERHAUL BALL BG BLOCK	1	CROSBY	4,8	
	60	WEDGE SOCKETS S=4,2/1 1	1	CROSBY	13,9	
22580883	59	WIRE ROPE D.26 AUXILIARY HOIST	1	SWITEF	432,8	DWG 250/0883
22580958	58	WIRE ROPE D.26 BOOM HOIST	1	SWITEF	2254,0	DWG 250/0958
50013155	57	HEX HD SCREW M8x25	4	Cl. 8.8	0,0	UNI 5739
	56	ELECTRIC SLIP RING CER 50 C-2715+5xT+13x12+FL SPE-AE	1	CONDUCTIX WAMPFLER	8,0	
50182258	55	O-RING 258	4	COMM.	0,0	
50182262	54	O-RING 262	4	COMM.	0,0	
50013158	53	HEX HD SCREW M16x40	32	Cl. 8.8	0,1	UNI 5739
50020010	52	GREASE NIPPLE M10	4	INOX (AISI316L)	0,0	UNI 7663-A
22581181	51	COVER FOR STOP PIN	4	S235 JR EN10027-1	4,1	DWG 250/1181
22580836	50	SPACER ED.193,2 ID.174 h=7,5	4	ST 37-3 DIN 1700	0,4	DWG 250.0070
51804373	49	BUSHING OD=135 ID=119 CD=220 LG=90	4	AMBON	1,2	BRM-13 TPP 70090
22581188	48	BOOM ARTICULATION JOINT PIN	2	39NiCrMo3 UNI7845	78,5	DWG 250/1188
22580846	47	BOOM GENERAL ASSEMBLY	1	--	39451,0	DWG 250/0846
50080724	46	NUT M24	62	Cl. 8G	0,1	UNI 5589
50080224	45	NUT M24	62	Cl. 8G	0,1	UNI 5587
50080568	44	HEX HD SCREW M24x90	14	Cl. 8.8	0,4	UNI 5737
50080425	43	WASHER 25x44	124	STEEL	0,0	UNI 6592
21163931	42	GENERAL ASSEMBLY AS #30/01/1 BOOM WINCH	1		3008,8	DWG 216/3931
22581085	41	COMPLETE REVOLVING TURRET (ACCESSORIES)	1	--	389,4	DWG 250/1085
50013459	40	HEX HD SCREW M20x45	27	Cl. 8.8	0,2	UNI 5739
50080421	39	WASHER 21x33	30	STEEL	0,0	UNI 6592
22581052	38	COMPLETE BUMPER BOOM + REVOLVING TURRET	2		619,0	DWG 250/1052
21580683	37	STOP PIN PLATE	8	S235 JR EN10027-1	0,1	DWG 150/8683
50013204	36	HEX HD SCREW M20x20	20	Cl. 8.8	0,1	UNI 5739
22581039	35	PIN FOR CONNECTION REVOLVING TURRET	4	39NiCrMo3 UNI7845	7,3	DWG 250/1039
22580963	34	CONNECTION FOR GANTRY CRANE	2	--	354,5	DWG 250/0963
50013258	33	HEX HD SCREW M12x30	24	Cl. 8.8	0,0	UNI 5739
50080413	32	WASHER 13x24	56	STEEL	0,0	UNI 6592
50013255	31	HEX HD SCREW M16x25	6	Cl. 8.8	0,1	UNI 5739
50080417	30	WASHER 17x30	244	STEEL	0,0	UNI 6592
20170419	29	STOP PIN PLATE	12	S235 JR EN10027-1	0,3	DWG 3617-0419
22580983	28	PIN FOR GANTRY CRANE	6	39NiCrMo3 UNI7845	22,0	DWG 250/0983
22580956	27	SPACER ED.120 ID.110 h=45	3	ST 37-3 DIN 1700	0,6	DWG 250/0956
22580955	26	SPACER ED.120 ID.110 h=25	8	ST 37-3 DIN 1700	0,3	DWG 250/0955
50080132	25	HEX HD SCREW M36x90	62	Cl. 8.8	0,0	UNI 5737
50080408	24	WASHER 8,4x17	78	STEEL	0,0	UNI 6592
50095018	23	SEAL RM 110X130	14	AVP	0,0	
22580841	22	COVER FOR STOP BEARING	14	S235 JR EN10027-1	1,3	DWG 250/0841
51804020	21	BEARING	7	SKF	6,5	NNF 5022 ADA-2LSV
22581037	20	PULLEY FOR ROPE D.26	7	S355 J0 EN10027-1	98,3	DWG 250/1037
50013208	19	HEX HD SCREW M20x30	16	Cl. 8.8	0,1	UNI 5739
50080410	18	WASHER 10,5x21	68	STEEL	0,0	UNI 6592
50182751	17	O-RING 751	2	COMM.	0,0	
50182754	16	O-RING 754	2	COMM.	0,0	
22580954	15	COVER FOR STOP PIN	2	S235 JR EN10027-1	1,6	DWG 250/0954
22580979	14	UPPER PIN FOR GANTRY CRANE	1	39NiCrMo3 UNI7845	26,7	DWG 250/0979
22580963	13	FRONT PART GANTRY CRANE	1	--	4.201,7	DWG 250/0963
22580961	12	REAR PART GANTRY CRANE	1	--	4.392,1	DWG 250/0961
5001-0362	11	HEX SCH CAP SCREW M24x60	48	Cl. 8.8	0,4	UNI 5931
	10	REDUCTION GEAR SL560HC06/1981109/284,6/7L350.BC V5	3	Brevini	838,0	
22580953	9	REVOLVING TURRET	1	--	24892,2	DWG 250/0953
50080186	8	NUT M36	244	Cl. 8G	0,1	UNI 5589
50080236	7	NUT M36	244	Cl. 8G	0,1	UNI 5587
50080933	6	HEX HD SCREW M36x350	66	Cl. 10.9	3,3	UNI 5737
22581034	5	STUD BOLT M36x350 CL10.9	12	Cl. 10.9	2,8	DWG 250/1034
22581031	4	STUD BOLT M36x338 CL10.9	120	Cl. 10.9	2,6	DWG 250/1031
50080336	3	WASHER 37x66	348	C50	0,1	UNI 5714
	2	SLEWING RING 134.45.3150.03 LTC	1	--	3215,0	
22580953	1	COLUMN	1	--	9028,2	DWG 250/0953

Code	Pos.	Denomination	Pieces	Material	Weight kg	Note
22581554	138	STUD BOLT M36x590 CL10.9	2	--	4,8	DWG 250/1541
22581540	139	STUD BOLT M36x440 CL10.9	2	--	3,5	DWG 250/1540
50031227	136	HEX HD SCREW M10x25	4	Cl. 8.8	0,0	UNI 5739
22581535	123	PROTECTION FOR CABIN GLASS	1	--	9,1	DWG 250/1535
50080208	126	SLIFKO NUT M8	6	Cl. 8G	0,0	UNI 7473
50013256	125	HEX HD SCREW M8x20	6	Cl. 8.8	0,0	UNI 5739
50013154	124	HEX HD SCREW M8x20	6	Cl. 8.8	0,0	UNI 5739
22581510	123	RIGHT WALKWAY TURRET SUPPORT	1	--	3,4	DWG 250/1510
22581511	122	LEFT WALKWAY TURRET SUPPORT	1	--	3,2	DWG 250/1511
22581503	121	PROTECTION FOR PIPES	1	--	83,1	DWG 250/1503
50080935	120	HEX HD SCREW M36x410	38	Cl. 10.9	3,1	UNI 5737
22581462	119	REINFORCEMENT FOR TURRET	1	S355 J2G3 EN10025-1	101,1	DWG 250/1462
22581461	118	REINFORCEMENT FOR TURRET	1	S355 J2G3 EN10025-1	116,5	DWG 250/1461
	117	LIGHT SPAR 600 GT	1		12,1	NUOVA ASP 600 W (SEE ELECTR.DIAGRAM)

Mod.	Date	Updated
A	20/09/11	UPDATED WITH REPLACEMENT OF FOR TURRET
B	11/10/11	UPDATED WITH STUD BOLTS FOR SLEWING
C		

Note:	Mod.	Date
	A	20/09/11
	B	11/10/11
	C	

marine equipment
PELLEGRINI
Via E. Torricelli 2/A - 37135 VERONA - Italy

ALLOWANCES NOT INDICATED

Roughcast parts
Worked parts
Lenght
Diameter

Drawn: Sperl Paride 31/05/11
Checked
Approved

Group 250
Denomination GENERAL ASSEMBLY
GN 25/25 DH

SCALE 1:25

Material: -
Modality:
Mark kg: 108700.gov
Quantity: 1
Treatment
File: 250095900B
Drawing Number: ABC

N° 250/0959

Class. GN 25/25 DH
No. 1064, 1065

It is strictly forbidden to reproduce or transmit to others the object of the present drawing.

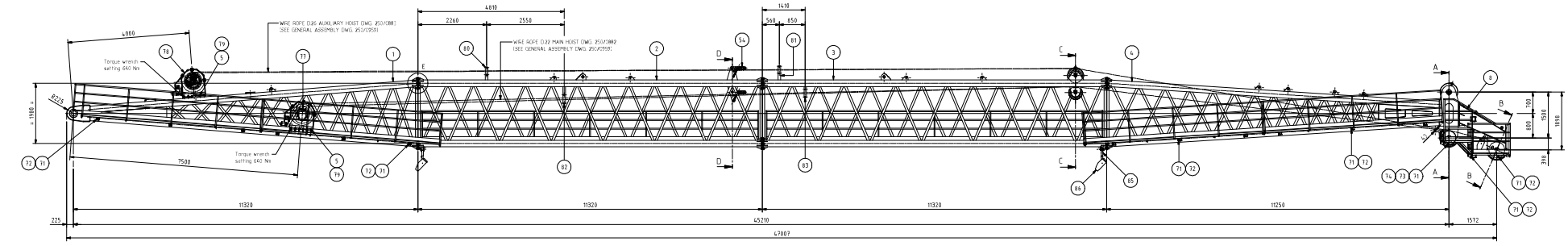

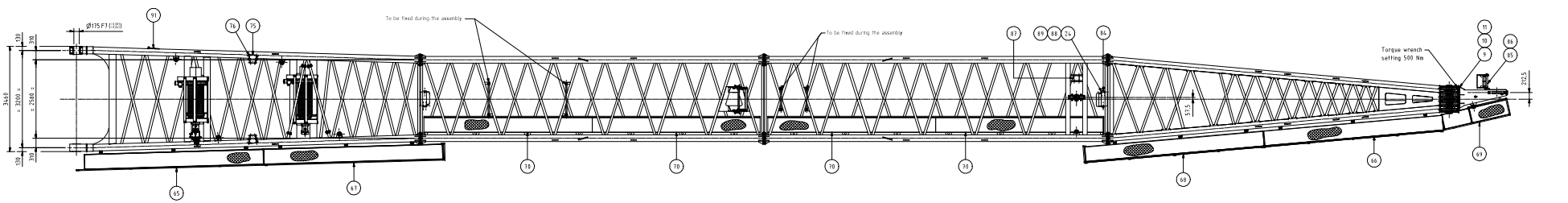

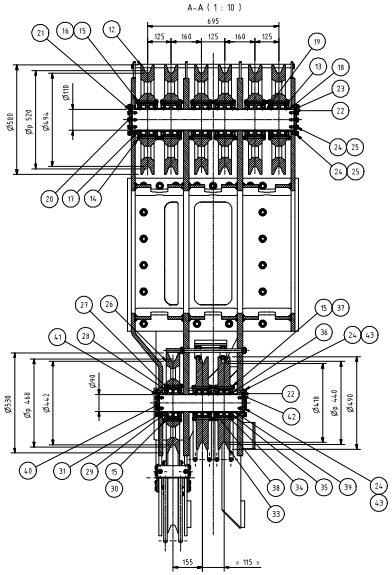

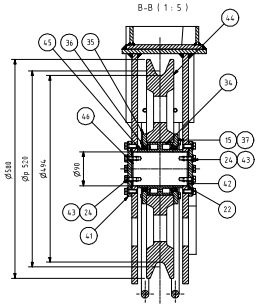

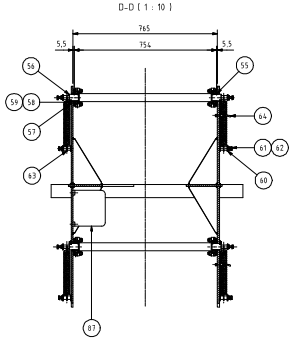

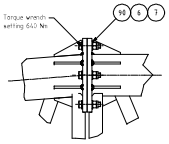

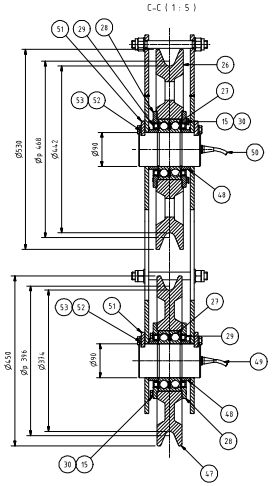

22501021	55	SPACER E.D.48,3 ID.35 h=5,5	4	ST 37-0 DIN 11103	0,0	DWG 250/1021
22501014	54	SLACK ROPE DETECTORS SYSTEM	2	---	21,7	DWG 250/1014
90011095	53	HEX HD SCREW M12x25	8	CL 8.8	0,0	UNI 5739
90081431	52	WASHER 13x24	8	STEEL	0,0	UNI 6592
22501419	51	STOP PIN PLATE	4	S235 JR EN10021-1	0,3	DWG 250/0419
22501881	50	LOAD CELL PIN AUXILIARY HOISTING	1	AISI 630	8,4	DWG 250/0881
22501884	49	LOAD CELL PIN MAIN HOISTING	1	AISI 630	16,6	DWG 250/0884
22501761	48	SPACER E.D.105 ID.90 h=25	4	ST 37-0 DIN 11103	0,4	DWG 250/0761
22501761	47	PULLEY FOR ROPE D.22	1	S355 J0 EN10021-1	40,7	DWG 250/0761
22501850	46	PIN FOR JIB	1	39NiCrMo3 UNI7845	3,3	DWG 250/0850
22501764	45	SPACER E.D.100 ID.90 h=26,5	2	ST 37-0 DIN 11103	0,3	DWG 250/0764
22501758	44	PULLEY FOR ROPE D.26	1	S355 J0 EN10021-1	80,8	DWG 250/0758
90111205	43	HEX HD SCREW M10x25	24	CL 8.8	0,0	UNI 5739
90162751	42	O-RING 151	4	COMM.	0,0	---
22501851	41	COVER FOR STOP PIN	4	S235 JR EN10021-1	1,2	DWG 250/0851
22501853	40	LOWER PIN BOOM HEAD	1	39NiCrMo3 UNI7845	22,1	DWG 250/0853
22501859	39	SPACER E.D.100 ID.90 h=36,5	2	ST 37-0 DIN 11103	0,4	DWG 250/0859
22501745	38	SPACER E.D.100 ID.90 h=48	1	ST 37-0 DIN 11103	0,6	DWG 250/0745
90201030	37	HEX HD SCREW M8x120	18	CL 8.8	0,0	UNI 5737
90094860	36	OIL SEAL SM 120120/12	6	A-P	0,0	---
22501744	35	COVER FOR STOP BEARING	6	S235 JR EN10021-1	1,4	DWG 250/0744
90001619	34	BEARING	2	SKF	3,7	NNF 5018 ADB-2LSV
22501743	33	PULLEY FOR ROPE D.22	2	S355 J0 EN10021-1	72,8	DWG 250/0743
22501858	31	SPACER E.D.105 ID.90 h=30	2	ST 37-0 DIN 11103	0,4	DWG 250/0858
90201068	30	HEX HD SCREW M8x90	18	CL 8.8	0,0	UNI 5737
90094920	29	OIL SEAL SM 120140/12	6	A-P	0,0	---
22501765	28	COVER FOR STOP BEARING	6	S235 JR EN10021-1	1,4	DWG 250/0765
90001595	27	BEARING	6	SKF	7,2	6218-2RS1
22501865	26	PULLEY FOR ROPE D.26	2	S355 J0 EN10021-1	60,1	DWG 250/0865
90111036	25	HEX HD SCREW M18x50	16	CL 8.8	0,0	UNI 5739
90080430	24	WASHER 19,5x37	64	STEEL	0,0	UNI 6592
90162751	23	O-RING 153	2	COMM.	0,0	---
90162754	22	O-RING 154	6	COMM.	0,0	---
22501864	21	COVER FOR STOP PIN	2	S235 JR EN10021-1	1,6	DWG 250/0864
22501863	20	UPPER PIN BOOM HEAD	1	39NiCrMo3 UNI7845	64,3	DWG 250/0863
22501856	19	SPACER E.D.120 ID.110 h=45	3	ST 37-0 DIN 11103	0,6	DWG 250/0856
22501855	18	SPACER E.D.120 ID.110 h=25	6	ST 37-0 DIN 11103	0,3	DWG 250/0855
22501247	17	OIL SEAL SM 120160/12	12	A-P	0,0	---
90201072	16	HEX HD SCREW M8x110	36	CL 8.8	0,0	UNI 5737
90080438	15	WASHER 8,4x17	72	STEEL	0,0	UNI 6592
22501861	14	COVER FOR STOP BEARING	12	S235 JR EN10021-1	1,3	DWG 250/0861
90001622	13	BEARING	6	SKF	6,5	NNF 5022 ADB-2LSV
22501864	12	PULLEY FOR ROPE D.26	6	S355 J0 EN10021-1	84,1	DWG 250/0864
90080222	11	SLIPLOCK NUT M22	20	CL 8G	0,1	UNI 7473
90111214	10	HEX HD SCREW M22x90	20	CL 8.8	0,3	UNI 5739
90080421	9	WASHER 23x39	40	STEEL	0,0	UNI 6592
22501869	8	U-BOLT	1	---	422,2	DWG 250/0869
90080224	7	SLIPLOCK NUT M24	96	CL 8G	0,2	UNI 7473
90201230	6	HEX HD SCREW M20x100	90	CL 8.8	0,5	UNI 5737
90080425	5	WASHER 25x44	24	STEEL	0,0	UNI 6592
22501845	4	BOOM ELEMENT 4° PART	1	---	3912,4	DWG 250/0845
22501848	3	BOOM ELEMENT 1° PART	1	---	5751,8	DWG 250/0848
22501A41	2	BOOM ELEMENT 2° PART	1	---	5686,1	DWG 250/0A41
22501861	1	BOOM ELEMENT 1° PART	1	---	7281,7	DWG 250/0861

Code	Pos.	Denomination	Pieces	Material	Mass kg	Note
22524057	91	INCLINOMETER	1	---	0,0	DWG 250/4057
90081925	90	WASHER 25x44	192	CS2	0,0	UNI 5714
90011208	89	HEX HD SCREW M12x40	12	CL 8.8	0,0	UNI 5739
90080210	88	SLIPLOCK NUT M10	12	CL 8G	0,0	UNI 7473
	87	JUNCTION BOX (CA-2)A	2	---	5,9	COELBO (SEE ELECTRICIAN DIAGRAM)
	86	LIGHT SPAN 400 QT	3	---	12,1	NUOVA ASF 400 W (SEE ELECTRICIAN DIAGRAM)
22524425	85	SUPPORT FOR SELF-ALIGNING LIGHT	1	---	15,6	DWG 250/4425
22524424	84	SUPPORT FOR LIGHT	2	S235 JR EN10025-1	8,3	DWG 250/4424
22521270	83	COMPLETE GUIDE ROPE ROLL	1	---	15,4	DWG 250/1270
22521268	82	COMPLETE GUIDE ROPE ROLL	1	---	22,5	DWG 250/1268
22521284	81	COMPLETE GUIDE ROPE ROLL	1	---	15,7	DWG 250/1284
22521260	80	COMPLETE GUIDE ROPE ROLL	1	---	20,2	DWG 250/1260
90011562	79	HEX HD SCREW M24x70	24	CL 8.8	0,3	UNI 5739
10163021	78	GENERAL ASSEMBLY AS 800A (AUXILIARY WINCH	1	---	1604,3	DWG 016/3021
10141884	77	GENERAL ASSEMBLY AS 750A (MAIN WINCH)	1	---	1321,8	DWG 016/1884
90350258	76	CSK SCH CAP SCREW M12x25	12	CL 8.8	0,0	UNI 5933
22521255	75	SLIDING STOP	2	NYLATRON GSM	1,1	DWG 250/1255
90369216	74	SLIPLOCK NUT M16	4	CL 8G	0,0	UNI 7473
90011360	73	HEX HD SCREW M16x50	4	CL 8.8	0,1	UNI 5739
90011356	72	HEX HD SCREW M16x35	56	CL 8.8	0,1	UNI 5739
90081417	71	WASHER 17x30	64	STEEL	0,0	UNI 6592
22501903	70	GRATING 25x76 PLATE 25x3	4	GALVANIZED STEEL	93,6	DWG 250/0903
22501862	69	BOOM WALKWAY	1	---	155,1	DWG 250/0862
22501859	68	BOOM WALKWAY	1	---	213,4	DWG 250/0859
22501925	67	BOOM WALKWAY	1	---	233,6	DWG 250/0925
21525236	66	BOOM WALKWAY	1	---	224,7	DXF 15/2936
22521099	65	BOOM WALKWAY	1	---	229,5	DWG 250/1099
	64	ADJUSTING SENSOR (RSA1.12-0A0C1)	2	SIEMENS	0,1	---
20810176	63	EXTENSION SPRING	4	STEEL	0,0	DWG 81/1036
90080911	62	NUT M10	4	CL 8S	0,0	UNI 5588
90111274	61	HEX HD SCREW M10x70	4	CL 8.8	0,2	UNI 5739
22521419	60	REDUCTION FOR SPRING	4	S235 JR EN10021-1	0,1	DWG 250/1419
90201183	59	HEX HD SCREW M6x16	8	CL 8.8	0,0	UNI 5739
90080406	58	WASHER 6,4x12,5	8	STEEL	0,0	UNI 6592
20145759	57	STOP PIN PLATE	4	S235 JR EN10021-1	0,0	DWG 14-1253
22521020	56	PIN	4	AISI INOX 15	0,4	DWG 250/1020

marine equipment
PELLEGRINI
Via E. Torricelli 2/A - 37135 VERONA - Italy

ALLOWANCES NOT INDICATED

Welden parts	
Worked parts	
Lenght	
Diameter	

Drawn: Speri Paride 11/04/11
Checked:
ENGINEERING
Approved:

Group 250
Class. GN 25/25 DH
No. 1864/1085

Denomination BOOM GENERAL ASSEMBLY

SCALE 1:50

Material: Mould No.: Mass kg 30500
Quantity: 1
Treatment:
File: 2500846CA
SN. + or -
N° 250/0846
Index ABC

Any details forbidden to reproduce or transmit to others the object of the present drawing.

Index	Date	Issues	Updated
A	11/04/2011	S.S.P.	
B	31/05/2011	S.S.P.	Additional Items pos. 89 / 91 / 92 / 93
C	08/08/2011	S.S.P.	Updated washers & fixed boom elements

MODIFICATION

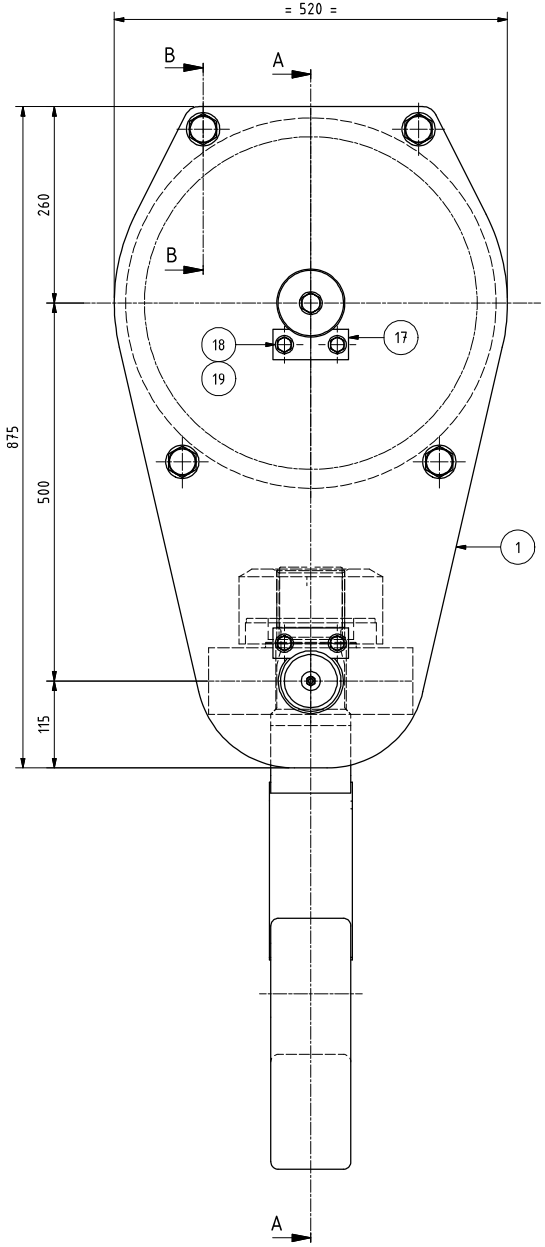

A-A (1 : 5)

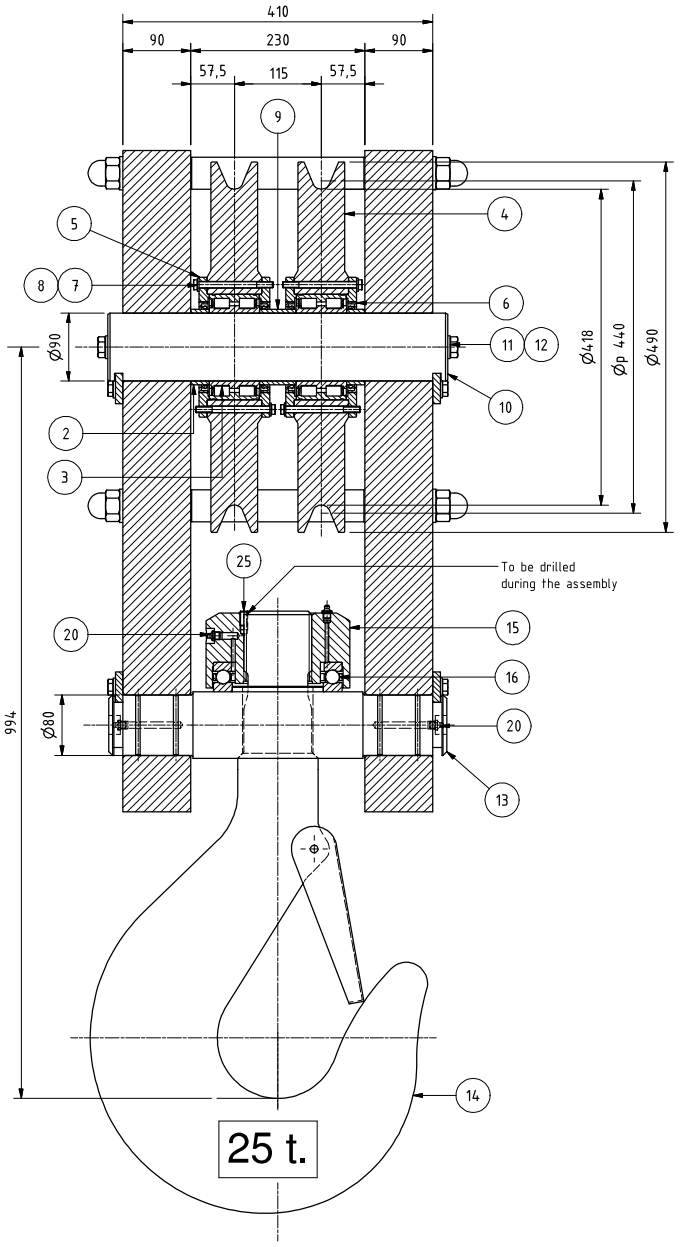

B-B (1 : 5)

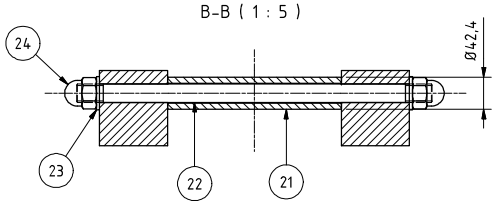

50016659	25	HEX SKT FP S-SCREW M10x20	1	Cl. 12.9	0,0	UNI 5923
50075024	24	NUT M24	8	Cl. 6S	0,2	UNI 5721
50080425	23	WASHER 25x44	8	STEEL	0,0	UNI 6592
22500751	22	PIN FOR SPACER	4	C40 UNI7845	1,7	DWG 250/0751
22500750	21	SPACER	4	ST 37-0 DIN 17100	1,6	DWG 250/0750
50020010	20	GREASE NIPPLE M10	4	INOX (AISI316L)	0,0	UNI 7663-A
50013256	19	HEX HD SCREW M12x30	8	Cl. 8.8	0,0	UNI 5739
50080413	18	WASHER 13x24	8	STEEL	0,0	UNI 6592
20070419	17	STOP PIN PLATE	4	S235 JR EN10027-1	0,3	DWG 007/0419
51001209	16	BEARING	1	SKF	2,7	51224
21508559	15	HOOK THREADED HUB	1	C45 UNI7845	13,5	DWG 150/8559
21509386	14	HOOK TYPE RFN 20 DIN 15401/1	1	--	112,0	DWG 150/9386
22500748	13	HOOK TRAVERSE	1	S355 J2G3 EN10027-1	45,5	DWG 250/0748
50013355	12	HEX HD SCREW M16x25	2	Cl. 8.8	0,1	UNI 5739
50080417	11	WASHER 17x30	2	STEEL	0,0	UNI 6592
22500749	10	BLOCK PIN	1	39NiCrMo3 UNI7845	22,3	DWG 250/0749
22500745	9	SPACER E.D.100 I.D.90 h=48	1	ST 37-0 DIN 17100	0,6	DWG 250/0745
50000170	8	HEX HD SCREW M8x100	12	Cl. 8.8	0,0	UNI 5737
50080408	7	WASHER 8,4x17	12	STEEL	0,0	UNI 6592
50094840	6	OIL SEAL SM 10012012	4	A+P	0,0	
22500744	5	COVER FOR STOP BEARING	4	S235 JR EN10027-1	1,4	DWG 250/0744
22500743	4	PULLEY FOR ROPE D.22	2	S355 J0 EN10027-1	72,8	DWG 250/0743
51004016	3	BEARING	2	SKF	3,7	NNF 5018 ADB-2LSV
22500746	2	SPACER E.D.100 I.D.90 h=24	2	ST 37-0 DIN 17100	0,3	DWG 250/0746
22500747	1	BLOCK SHOULDER	2	S235 J2G3 EN10027-1	238,6	DWG 250/0747

Code	Pos.	Denomination	Pieces	Material	Mass kg	Note

D.N.V. TESTING

marine equipment
PELLEGRINI
Via E. Torricelli 2/A - 37135 VERONA - Italy

ALLOWANCES NOT INDICATED

Melden parts	
Worked parts	
Lenght	
Diameter	
Drawn: Speri Paride 22/12/10	ENGR/DSGN
Checked	Approved

Group 250 — Class. GN 25/25 DH
No. 1064,1065
Denomination BLOCK ASSEMBLY SWL 25 t.
SCALE 1:5

Material	Model Nr.	Mass kg
--		850

Treatment

Quantity 1

Sh. 1 of 1

N° 250/0742

File 2500742-A

MOD. PC00DT002MEP

Index

It is strictly forbidden to reproduce or transmit to others the object of the present drawing.

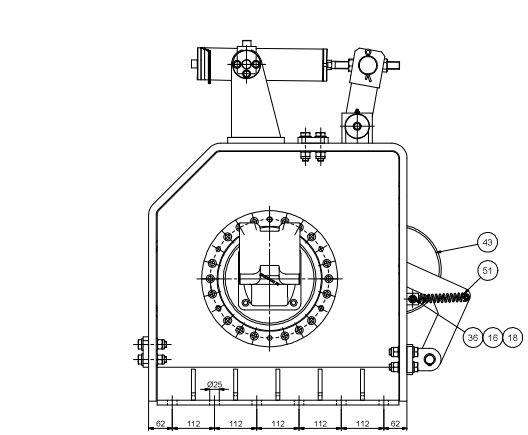

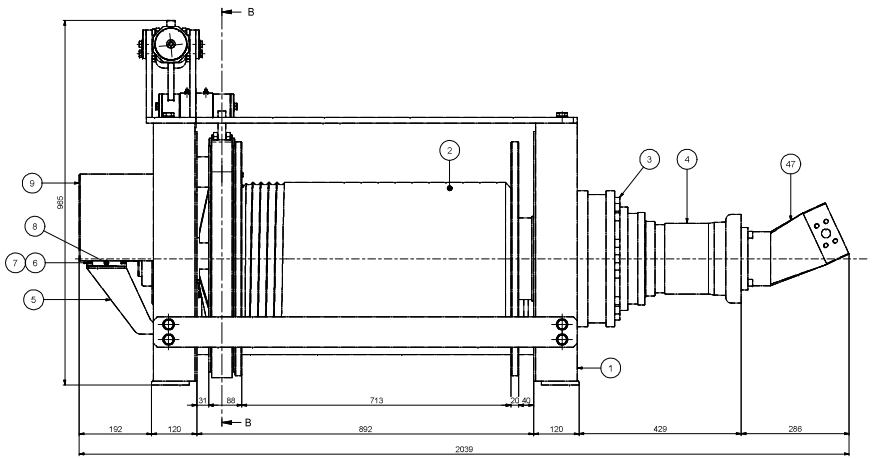

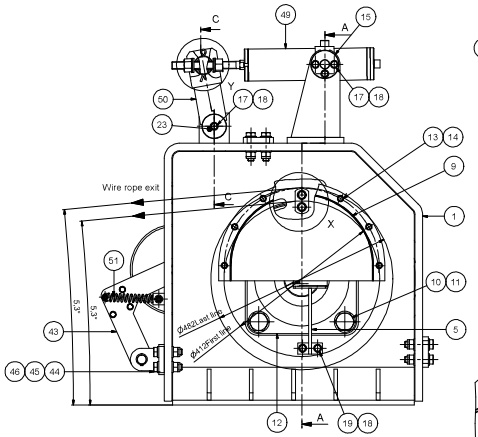

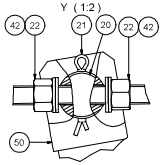

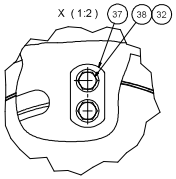

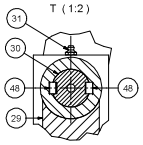

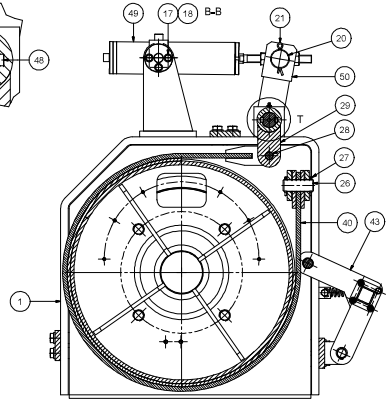

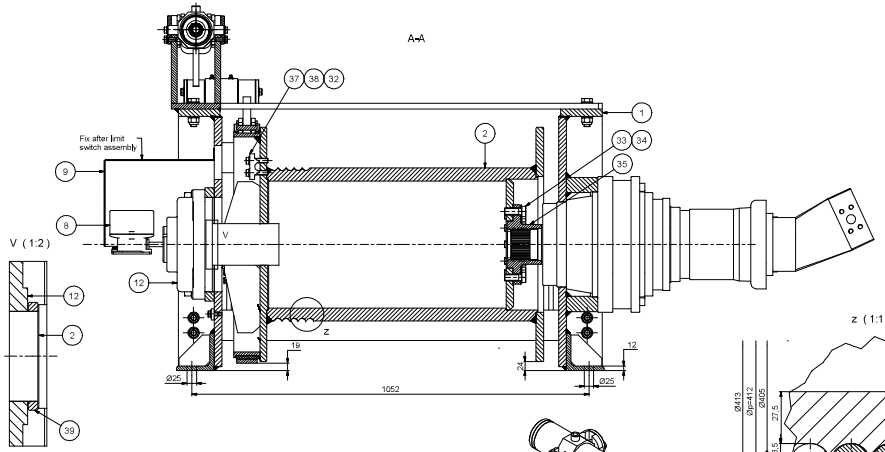

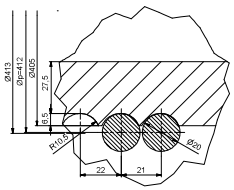

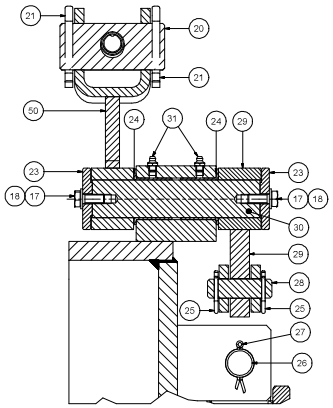

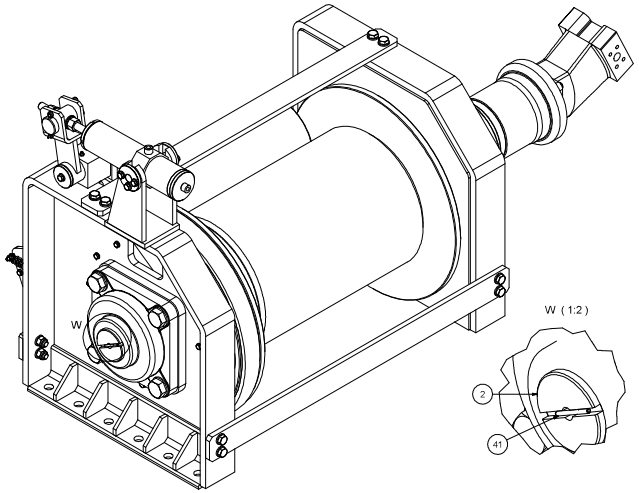

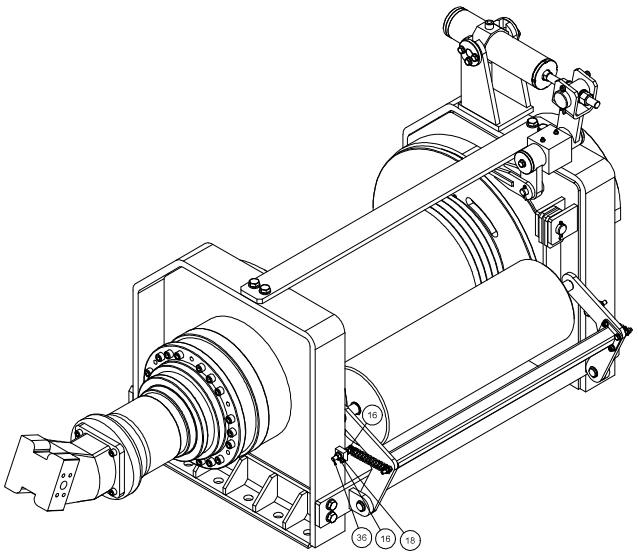

PERFORMANCES BASED ON MOTOR: H1C 75 M WITH: 240bar AT: 300bar						
ROPE LAYER	N°	1	2	3	4	5
LINE PULL	daN	9300	8654	8026		
LINE SPEED	m/min	52	56	60		
ROPE CAPACITY [m]	ROPE DIAM. 20mm	37	83	133		
MAX OIL FLOW	l/min	240				
MAX NOMINAL PRESSURE	bar	300				
DRUM TORQUE MAX	daNm	1934				
BRAKE TORQUE MAX	daNm	43				

50040256	52	SCREW M12X30 UNI 5931(8,8)	4	8,8	0	
21509603	51	SPRING	2	COMM.	0,1	DWG 150-9803
20141749	50	UPPER LEVER FOR BAND BRAKE	1		2,6	DWG 14-1749
20141746	49	CYLINDER FOR BRAKE	1		14,9	DWG 14-1746
53000330_A_43	48	TONGUE 12÷8×43	4	C40 UNI7845	1,5	UNI 6604-A
	47	HYDRAULIC MOTOR SAMHYDRAULIK H1C75	1	SAMHYDRAULIK	5,5	
50080216	46	SLFLKG NUT M16	4	CL 8G		UNI 7473
50080417	45	WASHER 17×30	8	STEEL		UNI 6592
50080363	44	HEXAGONAL HEAD SCREW 8,8 M16x65 UNI 5739	4	CL 8,8	0,1	UNI 5739
20141700	43	PRESSURE ROLLER FOR MAIN WINCH	1		58,2	DWG. 14-1700
50080421	42	WASHER 21x37	4	STEEL		UNI 6592
50021217	41	SPRING PIN 5X55	1	COMM.		UNI 6873
20141701	40	BAND BRAKE	1		12,1	DWG. 14-1701
20141702	39	PIPE D. 114,3X12,5 L=20mm	1	S235 JR EN10027-1	0,2	DWG. 14-1702
50013280	38	HEX HD SCREW M12x50	2	CL 8,8	0,1	UNI 5739
52000110	37	GALVANIZED CLAMP FOR WIRE D.20÷22	1	CP-ST		
50013213	36	HEX HD SCREW M10x65	2	CL 8,8	0,1	UNI 5739
	35	FLANGE FL MS 1600	1	SOM	7,5	
50080419	34	WASHER 19/34	12	STEEL		UNI 6592
50013409	33	SCREW M18X45	12	CL 8,8	0,1	UNI 5739
50080413	32	WASHER 13x24	2	STEEL		UNI 6592
50020005	31	GREASE NIPPLE INOX M8	2	INOX		
20141708	30	PIN FOR LEVER	1	39NiCrMo3 UNI7845	1,7	DWG 14-1708
20141699	29	LEVER FOR BAND BRAKE	1		1,5	DWG. 14-1699
20141709	28	BRAKE PIN	1	39NiCrMo3 UNI7845	0,2	DWG 14-1709
25X45	27	SPLIT PIN 5X45 UNI 1336	2	COMM.		
20141704	26	BRAKE PIN	1	39NiCrMo3 UNI7845	0,4	DWG 14-1704
50020252	25	SPLIT PIN 4x35	2	COMM.		UNI 1336
51004647	24	BUSHING OD=44 ID=40 CD=55 LG=40	2	TECHNYMON	0,1	BRAZO TFF 4040
	23	STOP WASHER	2	S275 JR EN10027-1	0,2	DWG 14-1615
50080020	22	NUT M20	2	CL 8G	0,1	UNI 5587
50020313	21	SPLIT PIN 8X63 UNI 1336	2	COMM.		UNI 1336
20141705	20	PIN FOR BRAKE	1	39NiCrMo3 UNI7845	1,5	DWG 14-1705
50013204	19	SCREW 8,8 M10X20 UNI 5739	2	CL 8,8		UNI 5739
50080410	18	WASHER 10,5×21	12	STEEL		UNI 6592
50013205	17	HEXAGONAL HEAD SCREW 8,8 M10X25 UNI 5739	8	CL 8,8		UNI 5739
50080110	16	NUT 8G M10 UNI 5588	4	CL 8G		UNI 5588
	15	WASHER FOR CYLINDER	2	S275 JR EN10027-1	0,3	DWG 14-1608
50080408	14	WASHER 8,4×16	6	STEEL		UNI 6592
50013154	13	HEX HD SCREW M8×20	6	CL 8,8		UNI 5739
	12	FLANGE UCFS 319	1	FYH	24	
50080431	11	PLAIN WASHER 31X56	4	COMM.		UNI 6592
	10	SCREW M30X80	4	CL 8,8	0,7	UNI 5739
20141706	9	LIMIT SWITCH PROTECTION	1		4,5	DWG. 14-1706
55000015	8	LIMIT SWITCH KRD (R 1/100)	1	GIOVENZANA	1,1	
50080406	7	WASHER 6,4×12,5	2	STEEL		UNI 6592
50013102	6	SCREW 8,8 M6X12 UNI 5739	2	CL 8,8		UNI 5739
20141707	5	LIMIT SWITCH SUPPORT	1		1,5	DWG. 14-1707
	4	REDUCTION GEAR BOX PG1603 MS n=75,2 FOR H1C75	1	SOM	129	
50082328	3	SCREW 10,9 M14X140 UNI 5931	18	CL 10,9	0,2	UNI 5931
20141696	2	MAIN WINCH DRUM	1		334,4	DWG. 14-1696
20141695	1	MAIN WINCH FRAME	1		271,2	DWG. 14-1695
Code	Pos.	Denomination	Pieces	Material	Weight kg	Note

Index	Date	Initials	Modification
			DWG 14-1694

marine equipment
PELLEGRINI
Via E. Torricelli 2/A - 37135 VERONA

ALLOWANCES NOT INDICATED

Maiden parts	
Worked parts	
Lenght	
Diameter	

Drawn: M.Pozzani 10/07/08
Checked:
Approved:
ENGINEERING

Group 014
Class GN 14/B DH
No.3839
Denomination
MAIN WINCH
(GENERAL ASSEMBLY)
SCALE 1:5
Material
Weight 886
Quantity 1
Treatment
File D141694_T.IDW
Dr. I of I
N°. 14-1694

This sheet is forbidden to reproduce or transmit to others the object of the present drawing.

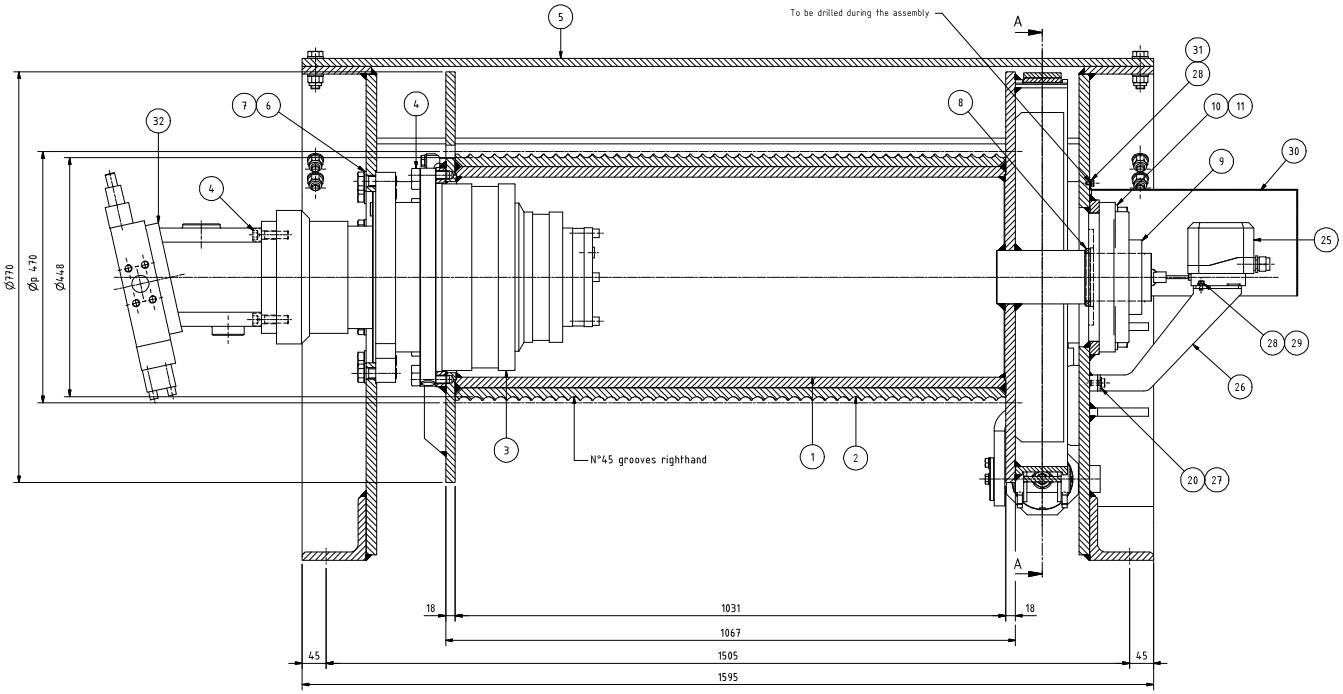

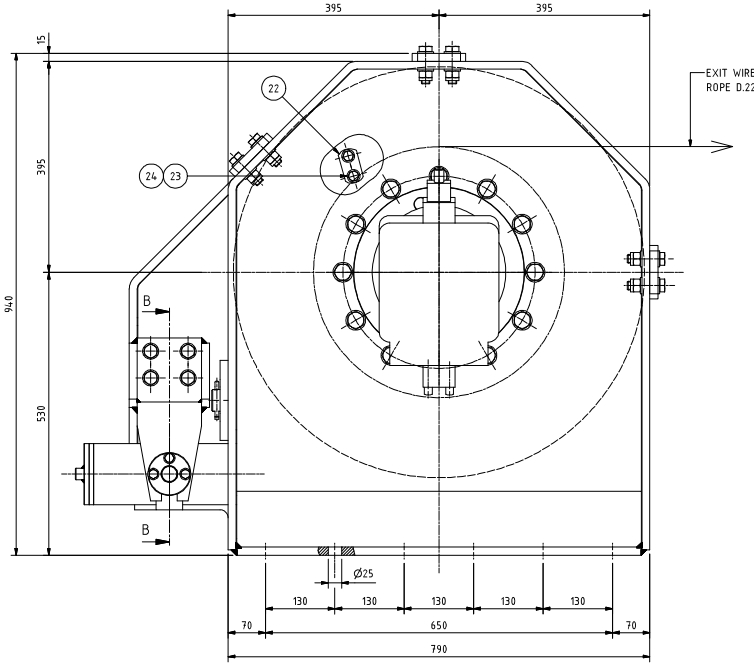

A-A (1 : 5)

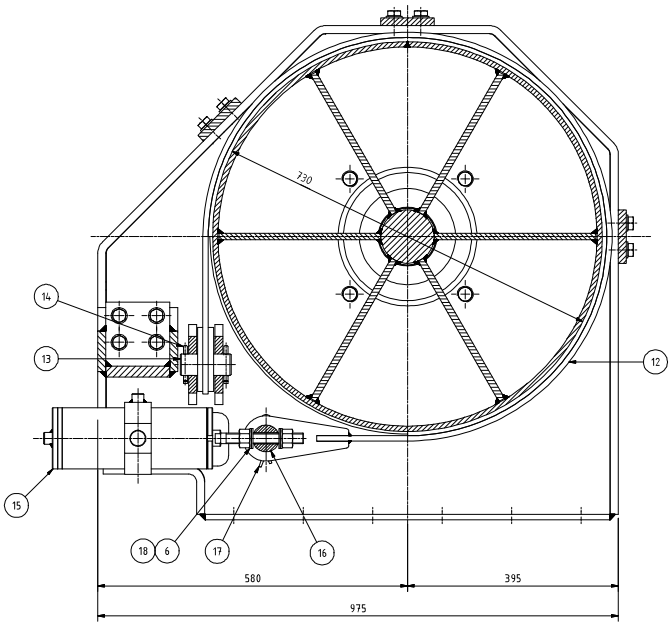

B-B (1 : 5)

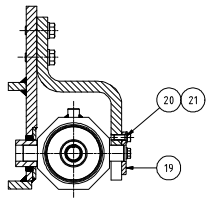

	35	BRAKE DISKS KIT	1			
	34	BEARINGS KIT	1			
	33	GASKETS KIT	1			
	32	HYDRAULIC MOTOR A6VM150-71	1	REXROTH BOSCH GROUP	61,0	
50013101	31	HEX HD SCREW M6x10	7	Cl. 8.8	0,0	UNI 5739
20141806	30	COVER FOR LIMIT SWITCH	1		5,2	DWG 014/1806
50013102	29	SCREW EXH M6x12	2	Cl. 8.8	0,0	UNI 5739
50080406	28	WASHER 6,4x12,5	9	STEEL	0,0	UNI 6592
50013204	27	HEX HD SCREW M10x20	2	Cl. 8.8	0,0	UNI 5739
20141892	26	LIMIT SWITCH SUPPORT	1	--	0,9	DWG 014/1892
	25	LIMIT SWITCH GF4C (1:250)	1	T.E.R.	1,0	
50013261	24	HEX HD SCREW M12x55	2	Cl. 8.8	0,1	UNI 5739
50080413	23	WASHER 13x24	2	STEEL	0,0	UNI 6592
	22	GALVANIZED CLAMP FOR ROPE D.22	1	ROBUR	0,4	
50013205	21	HEX HD SCREW M10x25	3	Cl. 8.8	0,0	UNI 5739
50080410	20	WASHER 10,5x21	5	STEEL	0,0	UNI 6592
20162664	19	STOP WASHER FOR CYLINDER	1	S235 JR EN10027-1	0,2	DWG 16-2664
50080020	18	NUT M20	2	Cl. 8G	0,1	UNI 5587
50020324	17	SPLIT PIN 10x71	2	STEEL	0,1	UNI 1336
20141890	16	PIN CYLINDER-BAND BRAKE	1	39NiCrMo3 UNI7845	1,4	DWG 014/1890
20141888	15	CYLINDER FOR BRAKE	1	--	24,0	DWG 014/1888
50020307	14	SPLIT PIN 8x50	2	STEEL	0,0	UNI 1336
20141889	13	PIN FOR FIXED END	1	39NiCrMo3 UNI7845	0,9	DWG 014/1889
20141887	12	BAND BRAKE	1	--	14,9	DWG 014/1887
50013714	11	HEX HD SCREW M30x70	4	Cl. 8.8	0,7	UNI 5739
50080431	10	WASHER 31x56	4	STEEL	0,1	UNI 6592
51005325	9	FLANGE UCFS 318	1	FYH	21,2	
20141586	8	SPACER E.D.108 I.D.90 h=10	1	ST 37-3 N DIN 17100	0,2	DWG 14-1586
50013462	7	HEX HD SCREW M20x60	12	Cl. 8.8	0,2	UNI 5739
50080421	6	WASHER 21x37	16	STEEL	0,0	UNI 6592
20141885	5	FRAME	1	--	382,1	DWG 014/1885
50040360	4	HEX SCH CAP SCREW M16x50	20	Cl. 8.8	0,1	UNI 5931
	3	REDUCTION GEAR RW 1523 F906 A6VM150-71 (i=50,25)	1	DINAMIC OIL	220,0	
	2	LEBUS GROOVE	1	S355 J2G3 EN10027-1	200,0	DWG LEBUS 111.05728.000
20141886	1	DRUM	1	--	377,4	DWG 014/1886
Code	Pos.	Denomination	Pieces	Material	Mass kg	Note

Index	Date	Initials	MODIFICATION
A	07/06/2011	S.P.	Additioned items pos.33-34-35
B	09/09/2011	S.P.	Updated
C	28/10/11	S.P.	

marine equipment
PELLEGRINI
Via E. Torricelli 2/A - 37135 VERONA - Italy

ALLOWANCES NOT INDICATED

Melden parts	
Worked parts	
Lenght	
Diameter	

Drawn: Sperl Paride 11/04/11 — ENGR/DSGN

Checked — Approved

Group 014 — Class. AS 750/I — No. 9093,9094

Denomination GENERAL ASSEMBLY
AS 750/I (MAIN WINCH)

SCALE 1:5

Material	Model Nr.	Mass kg
--		1330

Quantity: 1 — Sh. 1 of 1

Treatment

File: 0141884CA

N° 014/1884

Index: ABC — MOD. POSITIONER

It is strictly forbidden to reproduce or transmit to others the object of the present drawing.

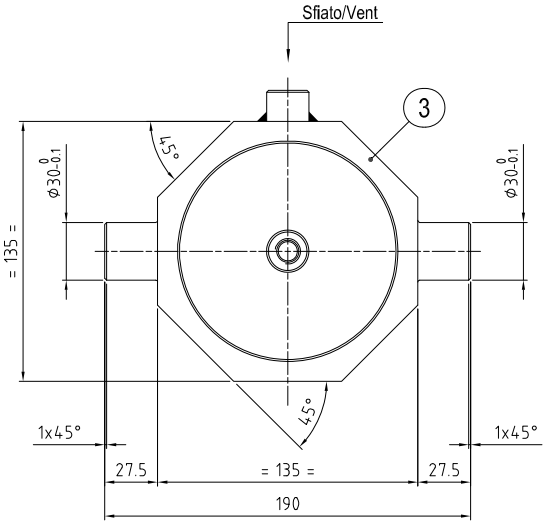

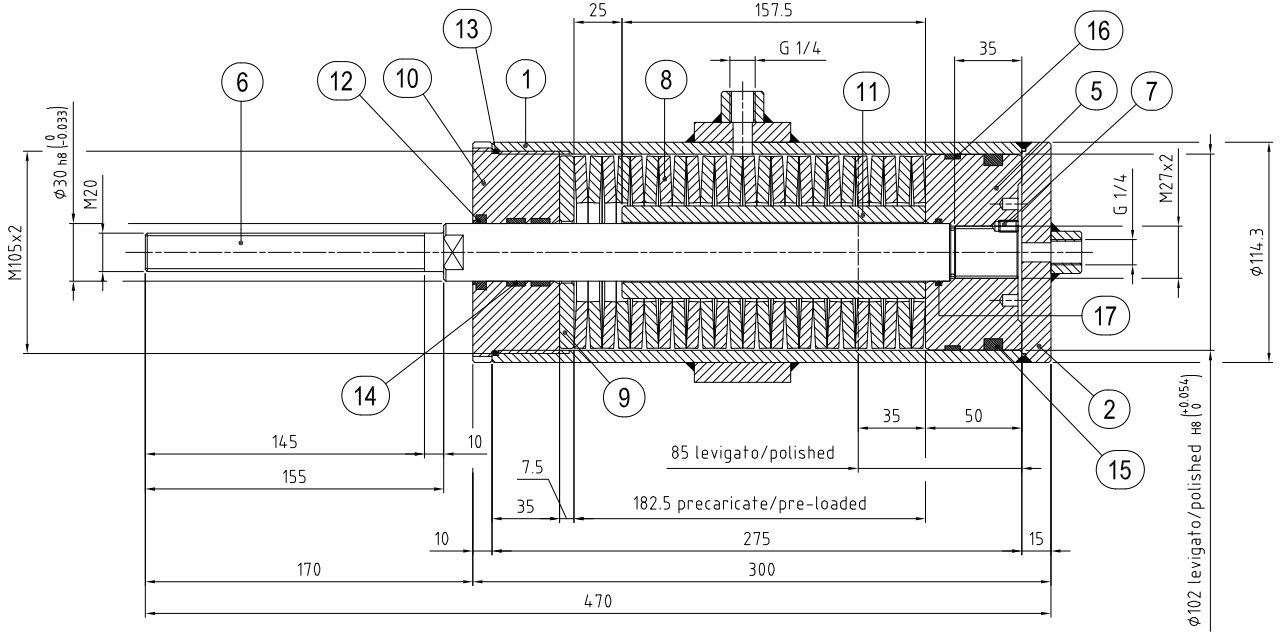

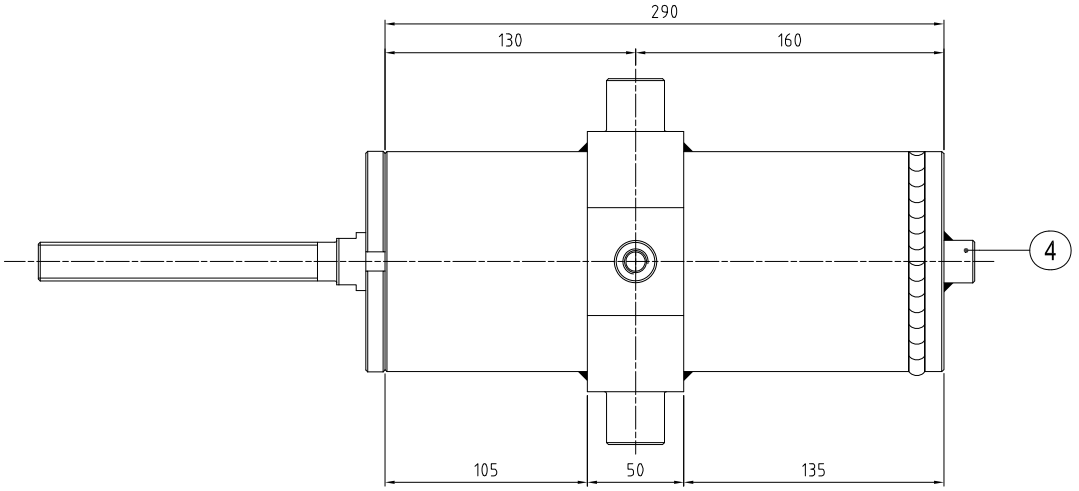

DATI CILINDRO NASTRO FRENO / BAND BRAKE CYLINDER DATA

ALESAGGIO CILINDO / CYLINDER BORE	= 102 mm
PRESSIONE DI LAVORO (75% MOLLE) / WORKING PRESSURE (75% SPRING)	= 61 bar
FORZA APERTURA FRENO (MOLLE 75%) / FORCE TO OPENING BRAKE (SPRING 75%)	= 48000 N
CORSA A 61 bar / STROKE to 61 bar	= 19 mm
LUNGHEZZA TOTALE MOLLE LIBERE / TOTAL SPRINGS LENGHT	= 205 mm
LUNGHEZZA MOLLE CON PRECARICO / PRE-LOADED SPRINGS LENGHT	= 182.5 mm
PRECARICO / PRE-LOADED	= 22.5 mm
FORZA DI PRECARICO (0 bar) / PRE-LOADED FORCE (0 bar)	= 27000 N

Pos.	Denomination	Pieces	Material	Mass. Kg.	Note
17	O-RING	1			
16	GUIDE RING	1			
15	SEAL	1			
14	GUIDE RING	2			
13	O-RING	1			
12	SCRAPER	1			
11	SPACER	1	E355 EN10297		OR:St52.0 DIN 2391/C
10	HEAD CYLINDER	1	S355J0 EN 10025		OR:C45 EN10083 OR:39NiCrMo3 UNI7845 OR:ASTM A350LF2
9	SPACER	1	E355 EN10297		OR:St52.0 DIN 2391/C
8	SPRING Ø100 Ø51 TH.6	25			
7	SCREW M6x10	1	Cl.8.8		UNI 5923
6	ROD CYLINDER	1	C45EN10083 CHROMIUN PLATED		OR:ASTM A105/97 OR:ASTM A350LF2 OR:39NiCrMo3 UNI7845 OR:S355JR EN10025
5	PISTON	1	C45 EN10083		OR:39NiCrMo3 UNI7845 OR:ASTM A105/97 OR:ASTM A350LF2
4	BOSS G 1/4	2	S235JR EN 10025		OR:S235J0 EN 10025
3	SUPPORT	1	E355 EN10297		OR:St52.0 DIN 2391/C OR:St52.3 DIN 2391/C
2	BOTTOM	1	S355J0 EN 10025		
1	BAR	1	E355 EN 10297		OR:St52.0 DIN 2391/C OR:St52.3 DIN 2391/C

marine equipment
DREPI PELLEGRINI
Via E. Torricelli 2/A - 37135 VERONA-ITALY

ALLOWANCES NOT INDICATED

Melden parts
Worked parts
Length
Diameter

Drawn: Speri Paride 21/02/11
ENGR/DSGN
Checked
Approved

Group 014
Class. AS 750/I 9093, 9094
Denomination CYLINDER FOR BRAKE
SCALE 1:2

Material: --
Model Nr.
Mass Kg. 24
Quantity 1
Treatment
SH. 1 OF 1
N°014/1888
File 0141888-A
Index
MOD. PDODT004MEP

Is strictly forbidden reproduce or trasmit to others the object of the present drawing

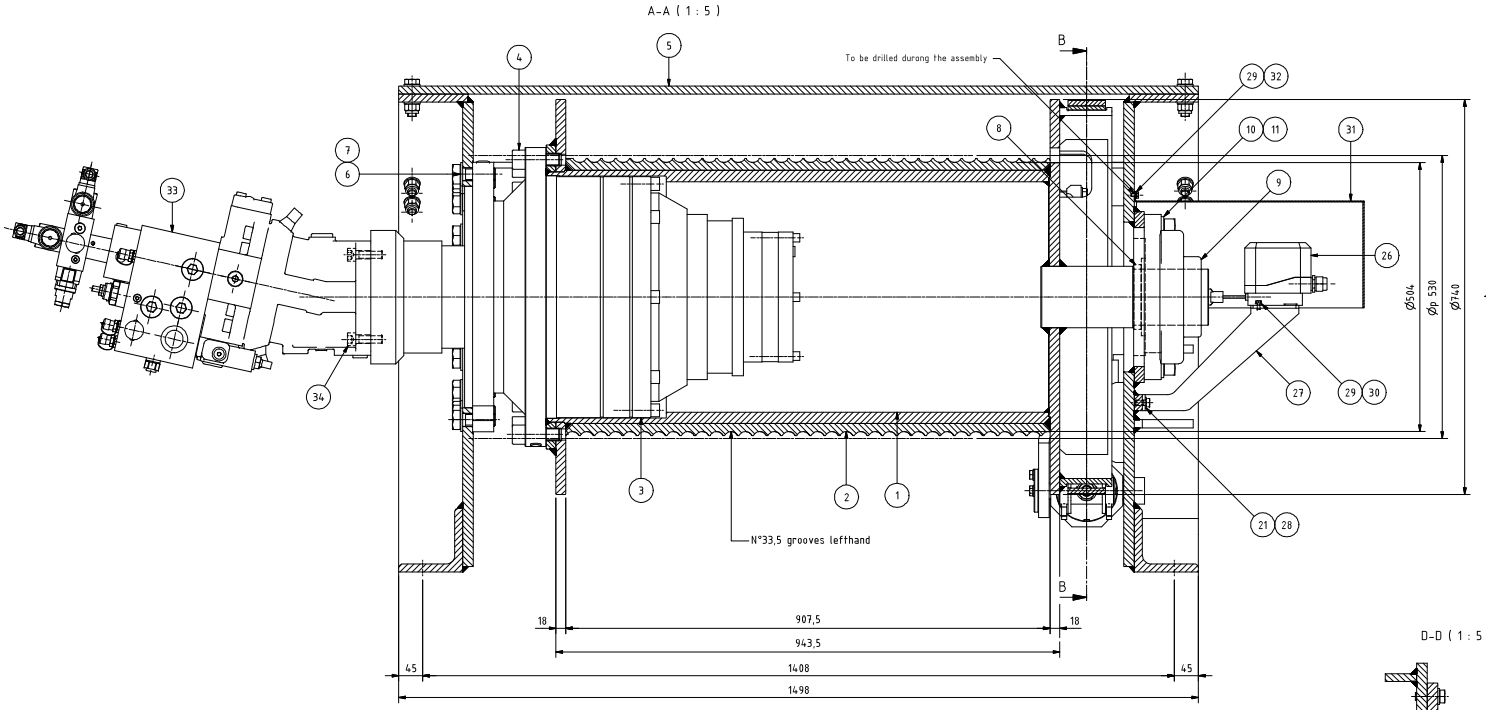

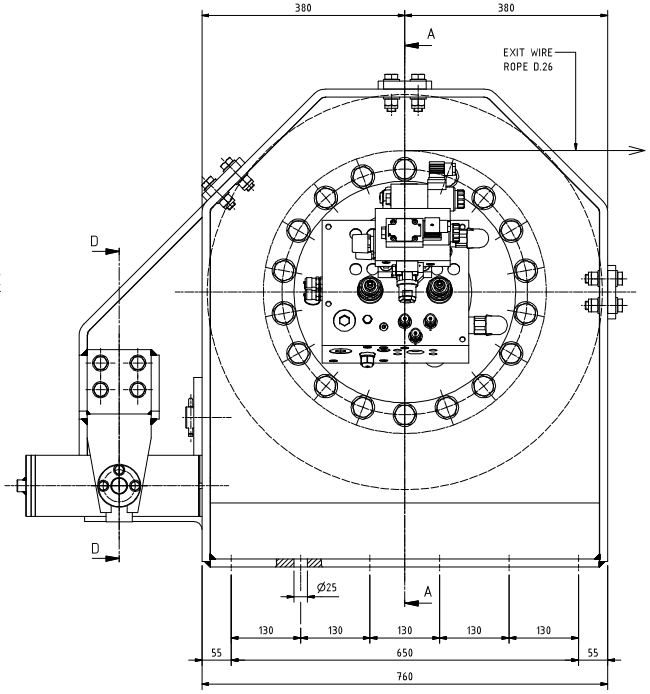

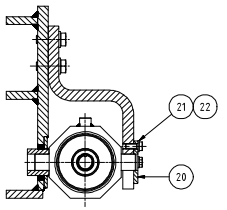

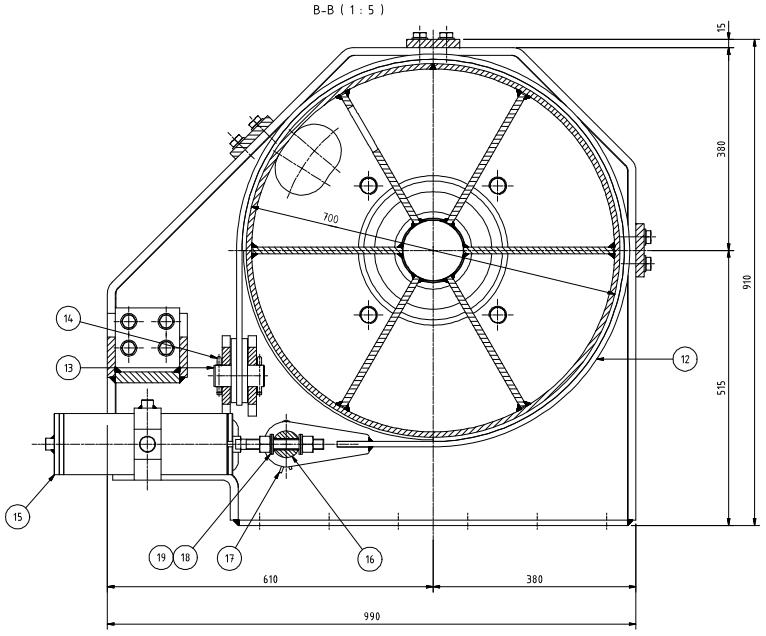

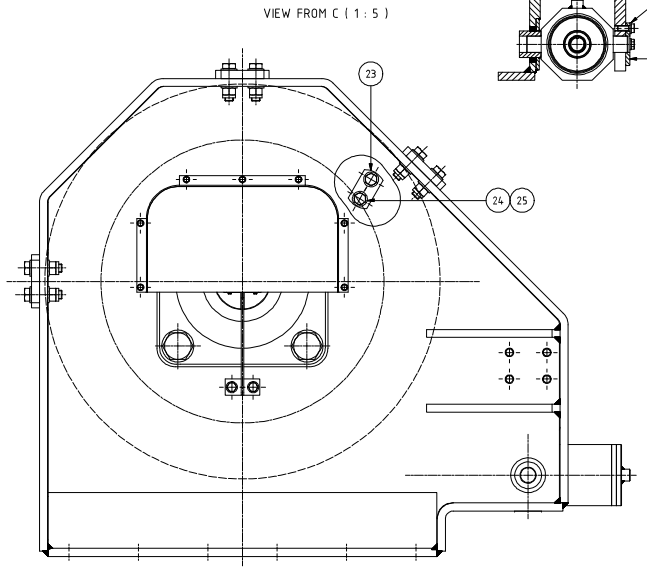

	37	BRAKE DISKS KIT	1			
	36	BEARINGS KIT	1			
	35	GASKETS KIT	1			
50040360	34	HEX SCH CAP SCREW M16x50	4	Cl. 8.8	0,1	UNI 5931
	33	HYDRAULIC MOTOR A6VM170-71 + BLOCK	1	REXROTH BOSCH GROUP	130,0	
50013101	32	HEX HD SCREW M6x10	7	Cl. 8.8	0,0	UNI 5739
20163030	31	COVER FOR LIMIT SWITCH	1	--	6,0	DWG 16/3030
50013102	30	SCREW EXH M6x12	2	Cl. 8.8	0,0	UNI 5739
50080406	29	WASHER 6,4x12,5	9	STEEL	0,0	UNI 6592
50013204	28	HEX HD SCREW M10x20	2	Cl. 8.8	0,0	UNI 5739
20163028	27	LIMIT SWITCH SUPPORT	1	--	0,9	DWG 016/3028
55000278	26	LIMIT SWITCH GFAC (1:75)	1	T.E.R.	1,0	
50013311	25	HEX HD SCREW M14x55	2	Cl. 8.8	0,1	UNI 5739
50080415	24	WASHER 15x28	2	STEEL	0,0	UNI 6592
	23	GALVANIZED CLAMP FOR ROPE D.26	1	ROBUR	0,5	
50013205	22	HEX HD SCREW M10x25	3	Cl. 8.8	0,0	UNI 5739
50080410	21	WASHER 10,5x21	5	STEEL	0,0	UNI 6592
20162664	20	STOP WASHER FOR CYLINDER	1	S235 JR EN10027-1	0,2	DWG 16-2664
50080020	19	NUT M20	2	Cl. 8G	0,1	UNI 5587
50080421	18	WASHER 21x37	4	STEEL	0,0	UNI 6592
50020324	17	SPLIT PIN 10x71	2	STEEL	0,1	UNI 1336
20141890	16	PIN CYLINDER-BAND BRAKE	1	39NiCrMo3 UNI7845	1,4	DWG 014/1890
20163026	15	CYLINDER FOR BRAKE	1	--	26,4	DWG 016/3026
50020307	14	SPLIT PIN 8x50	2	STEEL	0,0	UNI 1336
20141889	13	PIN FOR FIXED END	1	39NiCrMo3 UNI7845	0,9	DWG 014/1889
20163025	12	BAND BRAKE	1	--	14,5	DWG 016/3025
50013815	11	HEX HD SCREW M33x75	4	Cl. 8.8	0,9	UNI 5739
50080434	10	WASHER 34x60	4	STEEL	0,1	UNI 6592
	9	SUPPORT FLANGE UCFS 321	1	FYH	32,6	
20163029	8	SPACER E.D.121 I.D.105 h=15	1	ST 37-0 DIN 17100	0,3	DWG 016/3029
50013563	7	HEX HD SCREW M24x65	18	Cl. 8.8	0,4	UNI 5739
50080425	6	WASHER 25x44	18	STEEL	0,0	UNI 6592
20163023	5	FRAME	1	--	353,8	DWG 016/3023
50040563	4	HEX SCH CAP SCREW M24x65	18	Cl. 8.8	0,4	UNI 5931
	3	REDUCTION GEAR RW 3513 F912 A6VM170-71 (i=48,25)	1	DINAMIC OIL	470,0	
	2	LEBUS GROOVE	1	S355 J2G3 EN10027-1	190,0	DWG LEBUS 111.05729.000
20163022	1	DRUM	1	--	356,7	DWG 016/3022
Code	Pos.	Denomination	Pieces	Material	Mass kg	Note

Index	Date	Initials	MODIFICATION
A	07/06/11	S.P.	Additioned items pos.35-36-37
B	04/10/11	S.P.	Updated
C	04/11/11	S.P.	Updated

marine equipment
PELLEGRINI
Via E. Torricelli 2/A - 37135 VERONA - Italy

ALLOWANCES NOT INDICATED

Meksen parts	
Worked parts	
Lenght	
Diameter	

Drawn: Sperl Paride 11/04/11 — ENGR/DSGN — Checked — Approved

Group 016 — Class. AS 800/I — No. 9180,9181

Denomination GENERAL ASSEMBLY AS 800/I (AUXILIARY WINCH) — SCALE 1:5

Material	Model Nr.	Mass kg
--		1615

Treatment — Quantity 1 — Sh. 1 of 1

File 0163021CA — Index ABC — MOD. POSITIONER

N° 016/3021

It is strictly forbidden to reproduce or transmit to others the object of the present drawing.

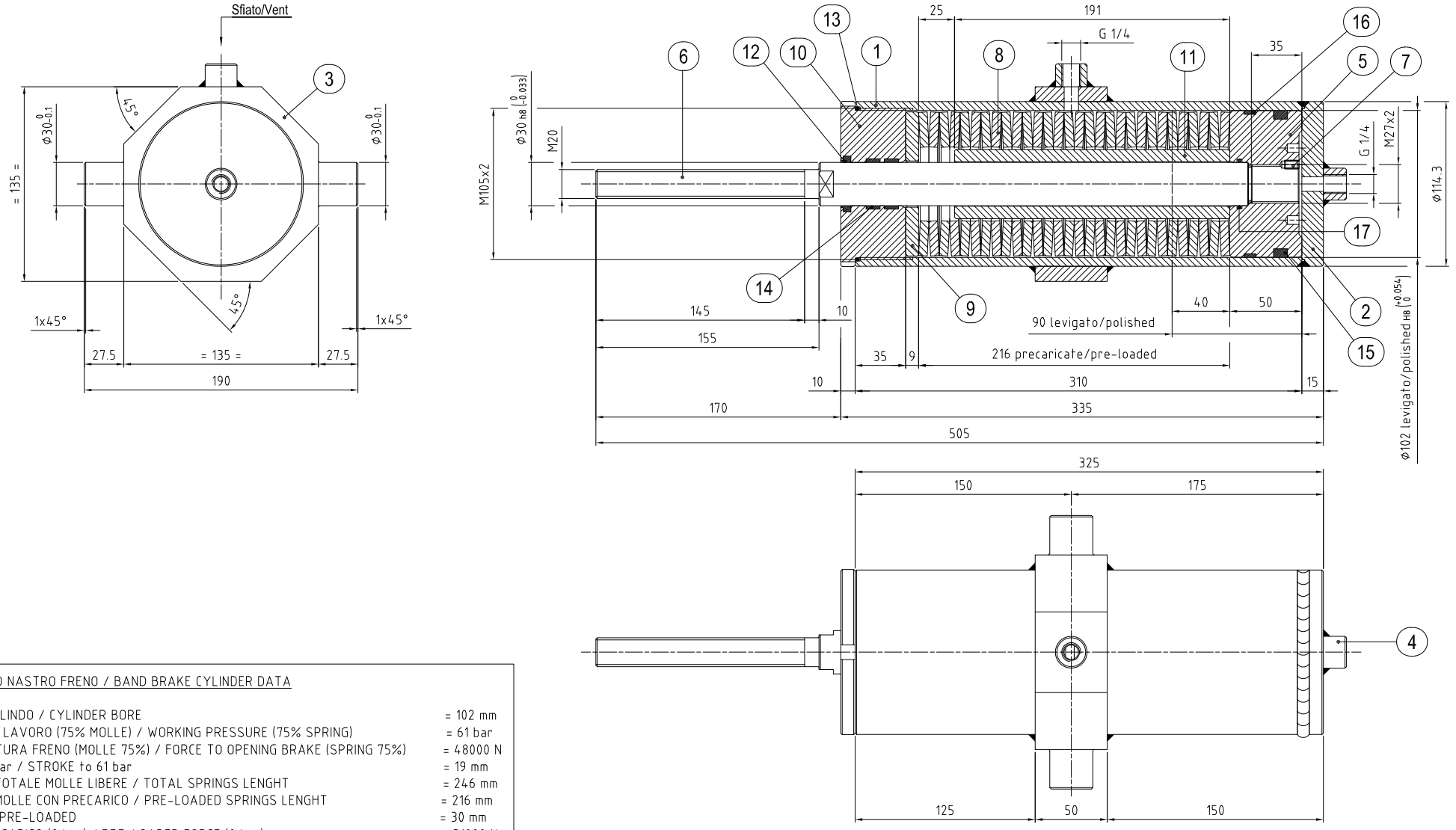

DATI CILINDRO NASTRO FRENO / BAND BRAKE CYLINDER DATA

ALESAGGIO CILINDO / CYLINDER BORE	= 102 mm
PRESSIONE DI LAVORO (75% MOLLE) / WORKING PRESSURE (75% SPRING)	= 61 bar
FORZA APERTURA FRENO (MOLLE 75%) / FORCE TO OPENING BRAKE (SPRING 75%)	= 48000 N
CORSA A 61 bar / STROKE to 61 bar	= 19 mm
LUNGHEZZA TOTALE MOLLE LIBERE / TOTAL SPRINGS LENGHT	= 246 mm
LUNGHEZZA MOLLE CON PRECARICO / PRE-LOADED SPRINGS LENGHT	= 216 mm
PRECARICO / PRE-LOADED	= 30 mm
FORZA DI PRECARICO (0 bar) / PRE-LOADED FORCE (0 bar)	= 31000 N

Pos.	Denomination	Pieces	Material	Mass. Kg.	Note
17	O-RING	1			
16	GUIDE RING	1			
15	SEAL	1			
14	GUIDE RING	2			
13	O-RING	1			
12	SCRAPER	1			
11	SPACER	1	E355 EN10297		OR:St52.0 DIN 2391/C
10	HEAD CYLINDER	1	S355J0 EN 10025		OR:C45 EN10083 OR:39NiCrMo3 UNI7845 OR:ASTM A350LF2
9	SPACER	1	E355 EN10297		OR:St52.0 DIN 2391/C
8	SPRING Ø100 Ø51 TH.6	30			
7	SCREW M6x10	1	Cl.8.8		UNI 5923
6	ROD CYLINDER	1	C45 EN 10083 CHROMIUN PLATED		OR:ASTM A105/97 OR:ASTM A350LF2 OR:S355JR EN10025 OR:39NiCrMo3 UNI7845
5	PISTON	1	C45 EN 10083		OR:39NiCrMo3 UNI7845 OR:ASTM A105/97 OR:ASTM A350LF2
4	BOSS G 1/4	2	S235JR EN 10025		OR:S235J0 EN 10025
3	SUPPORT	1	E355 EN 10297		OR:St52.0 DIN 2391/C OR:St52.3 DIN 2391/C
2	BOTTOM	1	S355J0 EN 10025		
1	BAR	1	E355 EN 10297		OR:St52.0 DIN 2391/C OR:St52.3 DIN 2391/C

marine equipment
PELLEGRINI
Via E. Torricelli 2/A - 37135 VERONA-ITALY

ALLOWANCES NOT INDICATED

Melden parts
Worked parts
Length
Diameter

Drawn: Speri Paride 28/02/11
ENGR/DSGN
Checked
Approved

Group 016
Class. AS 800/I 9180, 9181
Denomination CYLINDER FOR BRAKE
SCALE 1:2

Material --
Model Nr.
Mass Kg. 26.5
Quantity 1
Treatment
SH. 1 OF 1
N°016/3026
File 0163026-A
Index
MOD. PDODT004MEP

Is strictly forbidden reproduce or trasmit to others the object of the present drawing

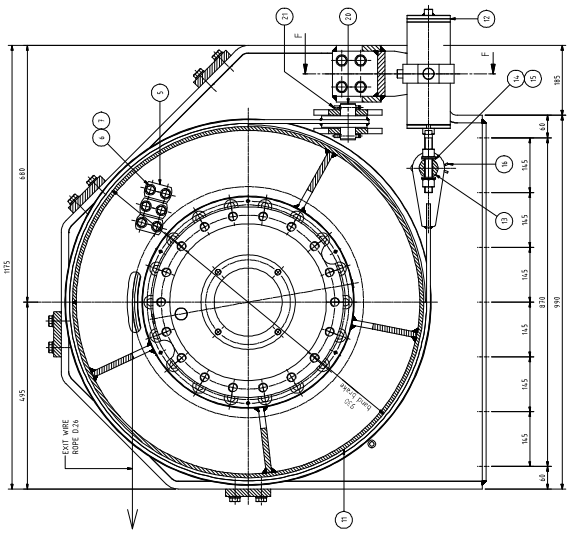
B-B (1 : 5)
EXIT WIRE ROPE D.26
EXIT WIRE ROPE D.26

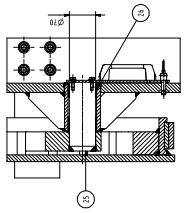
D-D (1 : 5)

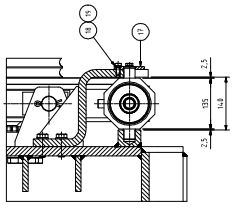
F-F (1 : 5)

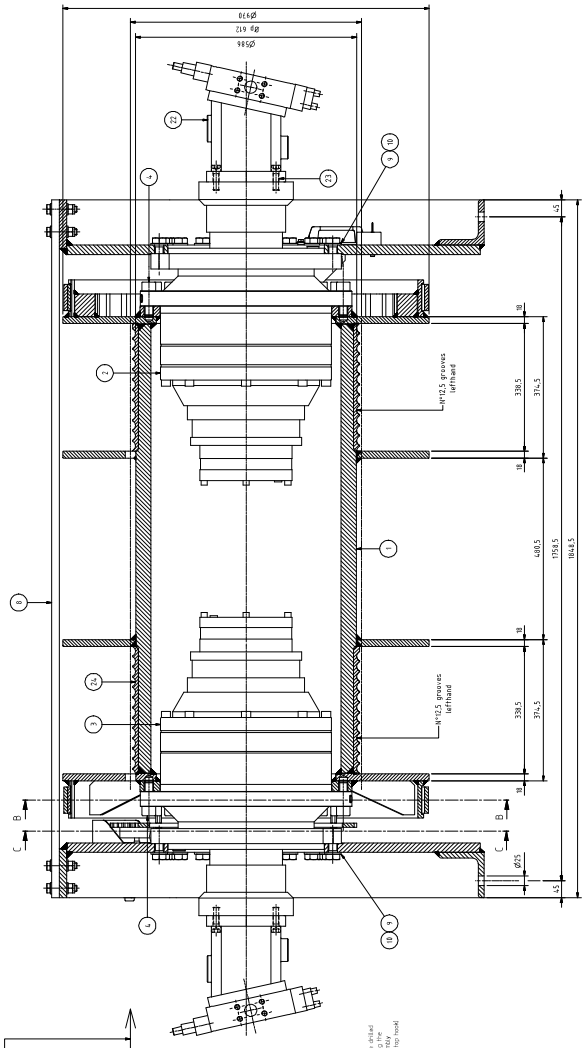
A-A (1 : 5)
M=12.5 grooves left-hand
M=12.5 grooves left-hand

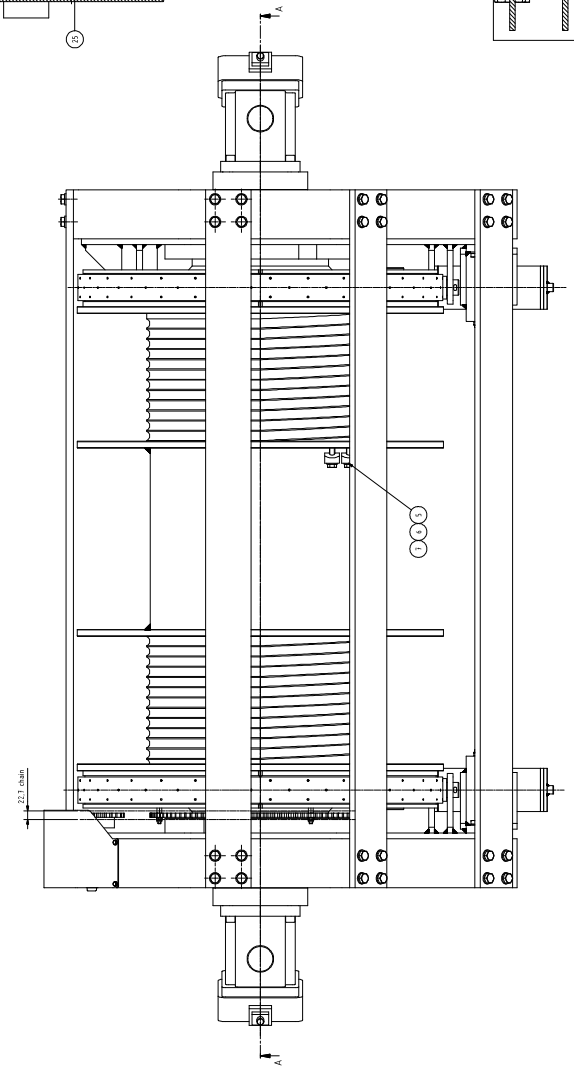
A
A
22.7 chain

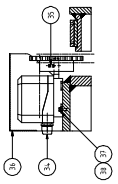
G-G (1 : 5)

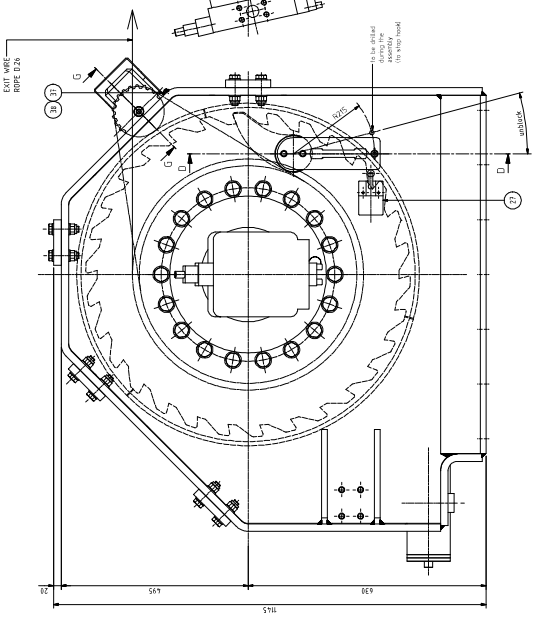
EXIT WIRE ROPE D.26
to be drilled during assembly (to wrap hose)
sabl.tol.%

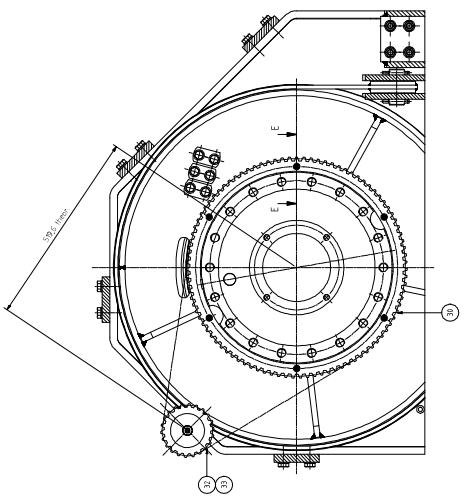
C-C (1 : 5)
170.2 linear

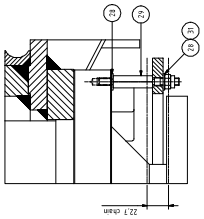
E-E (1 : 2)
22.7 chain

| | | |

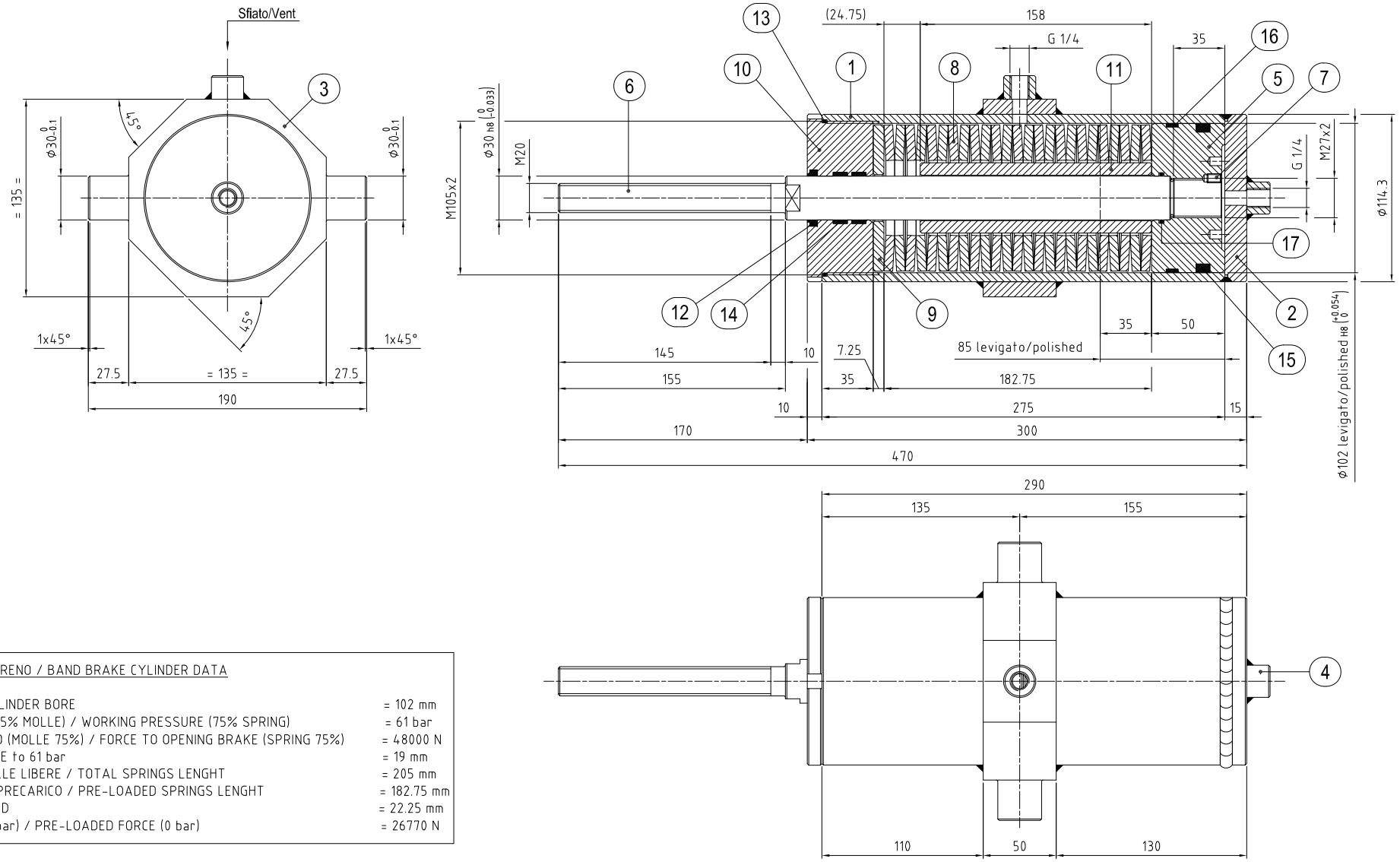

DATI CILINDRO NASTRO FRENO / BAND BRAKE CYLINDER DATA

ALESAGGIO CILINDO / CYLINDER BORE	= 102 mm
PRESSIONE DI LAVORO (75% MOLLE) / WORKING PRESSURE (75% SPRING)	= 61 bar
FORZA APERTURA FRENO (MOLLE 75%) / FORCE TO OPENING BRAKE (SPRING 75%)	= 48000 N
CORSA A 61 bar / STROKE to 61 bar	= 19 mm
LUNGHEZZA TOTALE MOLLE LIBERE / TOTAL SPRINGS LENGHT	= 205 mm
LUNGHEZZA MOLLE CON PRECARICO / PRE-LOADED SPRINGS LENGHT	= 182.75 mm
PRECARICO / PRE-LOADED	= 22.25 mm
FORZA DI PRECARICO (0 bar) / PRE-LOADED FORCE (0 bar)	= 26770 N

Pos.	Denomination	Pieces	Material	Mass. Kg.	Note
17	O-RING	1			
16	GUIDE RING	1			
15	SEAL	1			
14	GUIDE RING	2			
13	O-RING	1			
12	SCRAPER	1			
11	SPACER	1	E355 EN10297		OR:St52.0 DIN 2391/C
10	HEAD CYLINDER	1	S355J0 EN 10025		OR:C45 EN10083 OR:39NiCrMo3 UNI7845 OR:ASTM A350LF2
9	SPACER	1	E355 EN10297		OR:St52.0 DIN 2391/C
8	SPRING Ø100 Ø51 TH.6	25			
7	SCREW M6x10	1	Cl.8.8		UNI 5923
6	ROD CYLINDER	1	C45EN10083 CHROMIUN PLATED		OR:ASTM A105/97 OR:ASTM A350LF2 OR:39NiCrMo3 UNI7845 OR:S355JR EN10025
5	PISTON	1	C45 EN10083		OR:39NiCrMo3 UNI7845 OR:ASTM A105/97 OR:ASTM A350LF2
4	BOSS G 1/4	2	S235JR EN 10025		OR:S235J0 EN 10025
3	SUPPORT	1	E355 EN10297		OR:St52.0 DIN 2391/C OR:St52.3 DIN 2391/C
2	BOTTOM	1	S355J0 EN 10025		
1	BAR	1	E355 EN 10297		OR:St52.0 DIN 2391/C OR:St52.3 DIN 2391/C

marine equipment
PELLEGRINI
Via E. Torricelli 2/A - 37135 VERONA-ITALY

ALLOWANCES NOT INDICATED

Melden parts
Worked parts
Length
Diameter

Drawn: Speri Paride 15/03/11
ENGR/DSGN
Checked
Approved

Group 016
Class. AS 800/D/I 9200, 9201
Denomination CYLINDER FOR BRAKE
SCALE 1:2
Material --
Model Nr.
Mass Kg. 24
Quantity 2
Treatment
SH. 1 OF 1
N°016/3036
File 0163036-A
Index
MOD. PDODT004MEP

Is strictly forbidden reproduce or trasmit to others the object of the present drawing

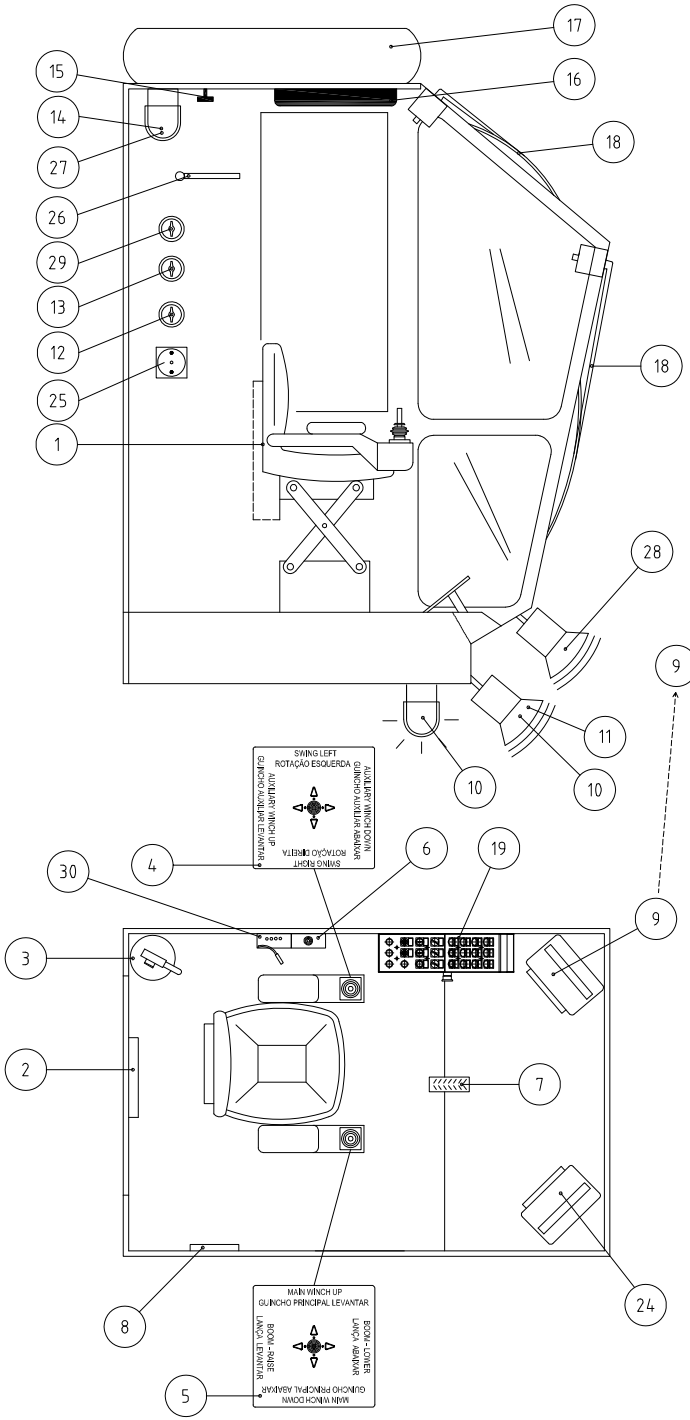

CABIN INSTRUMENTS

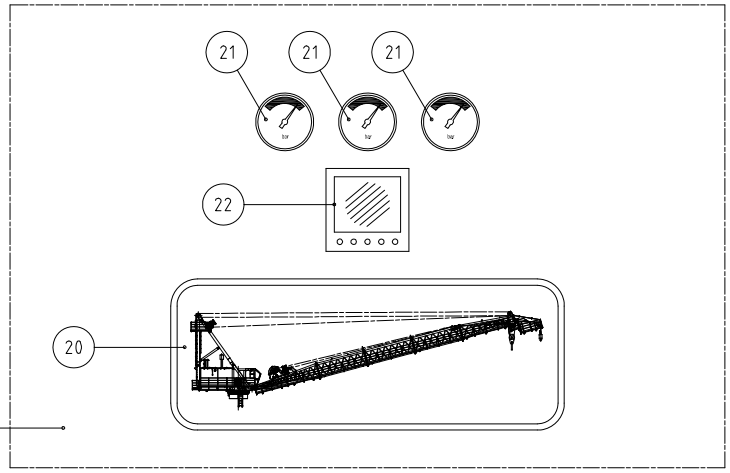

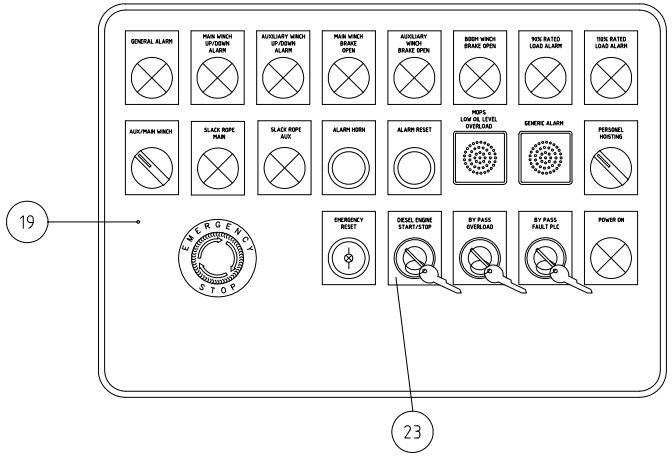

Pos.	DESCRIPTION
1	ADJUSTABLE ARM SEAT
2	DOCUMENTS BOX
3	FIRE EXTINGUER 6KG
4	JOYSTICK FOR SWING AND AUXILIARY HOIST
5	JOYSTICK FOR LUFFING AND MAIN HOIST
6	HAND SPRAY WINDSCEEN TANK
7	DIESEL ENGINE ACCELERATOR PEDAL
8	LOAD-RATING CHART
9	CRANE OPERATING CONTROL PANEL
10	ELECTRIC ALARM HORN
11	ACOUSTIC ALARM
12	WORKING LIGHT SWITCH
13	CABIN LIGHT SWITCH
14	CABIN LIGHT
15	AIR-CONDITIONING REGULATOR
16	AIR-CONDITIONING HEATER
17	AIR CONDITIONING SYSTEM
18	WINDSCREEN WIPER
19	COMAND PANEL
20	ELECTRONIC SUPERVISORY SYSTEM (DISPLAY FOR LOAD AND RADIUS INDICATIONS)
21	MANOMETER
22	ELECTRONIC DISPLAY FOR ENGINE SIGNALS
23	KEY FOR ENGINE START/STOP
24	ELECTRONIC DISPLAY FOR DIGITAL CAMERA
25	SOCKET 220Vac
26	MOPS ACTIVATION LEVER
27	DIMMER LIGHT
28	LOUD SPEAKER
29	BATTERY CHARGER SWITCH
30	MICROPHONE FOR LOUDSPEAKER

REV.	DESCRIPTION	DATE	EXEC.	CHECK	APPROV.
B					
A					
0	ORIGINAL ISSUE / FOR APPROVAL	19-08-13	PS	MC	GD

THIS DOCUMENTS IS PROPERTY OF PETROBRAS AND IT IS PROTECTED IN ACCORDANCE WITH PREVALING LAW IT SHALL ONLY BE USED FOR THE PURPOSE IT IS DELIVERED STANDARIREZ FORM BY N-381 (PETROBRAS) REV. F

marine equipment
PELLEGRINI
Via E. Torricelli 2/A - 37135 VERONA-ITALY

File N°: I-DE-3010.78-5260-800-MEP-002_0
VDR Codex: I-DE-3010.78-5260-800-MEP-002

BR *PETROBRAS*

ENGENHARIA / IEEPT/IEES

CLIENT OR USER: UN-ES / ATP-JUB-CHT

JOB OR PROJECT: NORTE DO PARQUE DAS BALEIAS FIELD DEVELOPMENT

AREA OR UNIT: PETROBRAS 58 (P-58)

DRAWING TITLE: OPERATOR CABIN LAYOUT

DESIGN BY:	DRAWN BY:	CHECKED BY:	APPROVED BY:
SCALE:	DRAWING TYPE:	CD: ---	SHEET 1 OF
DATE:	PNBV N°:	PNBV NUMBER	

Pos.	Denomination	Pieces	Material	Mass Kg.	Note

marine equipment
PELLEGRINI
Via E. Torricelli 2/A - 37135 VERONA-ITALY

ALLOWANCES NOT INDICATED

Melden parts	
Worked parts	
Length	
Diameter	

Group 250 Class. GN 25/25 DH 1064, 1065

Denomination LAYOUT

CABIN GN 25/25 DH

SCALE 1: 10

Material	Model Nr.	Mass Kg.
--		

Drawn	ENGR/DSGN
C. T. 11/03/11	
Checked	Approved

Quantity 1

Treatment

File 2501023-A

Index

SH. 1 OF 1

N°250/1023

MOD. PRODTO04REP

Is strictly forbidden reproduce or trasnit to others the object of the present drawing

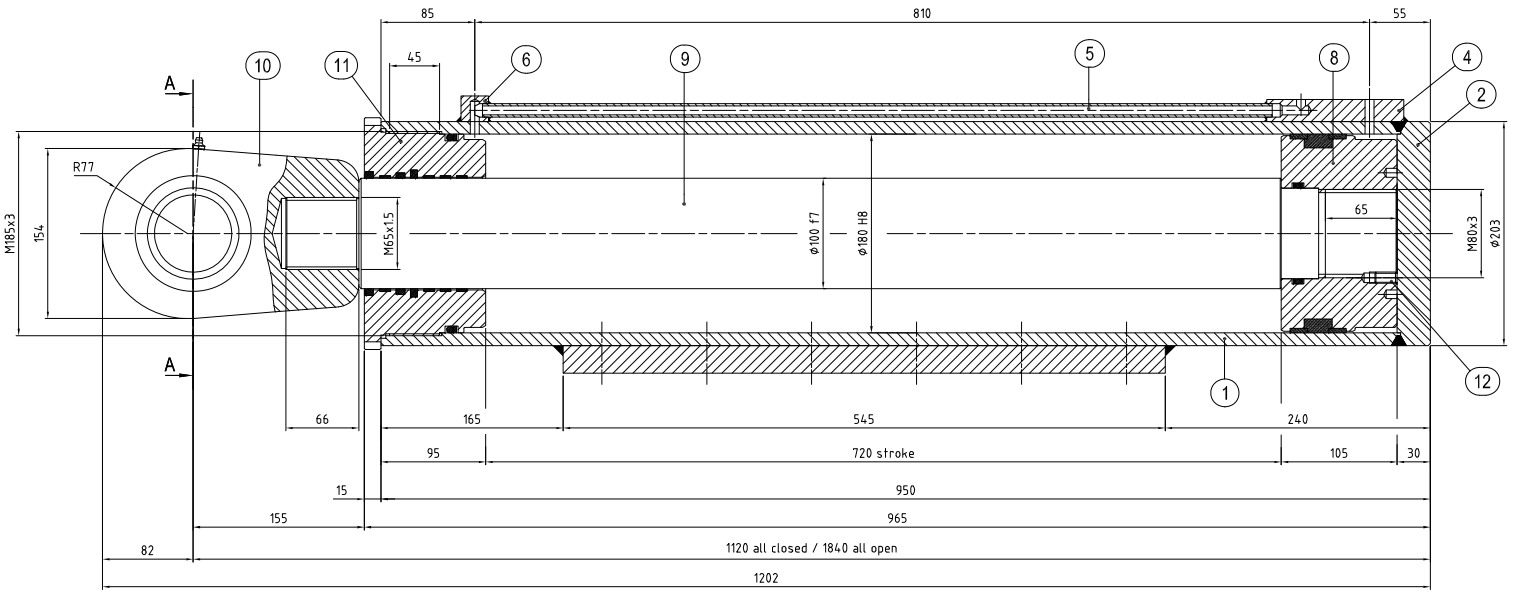

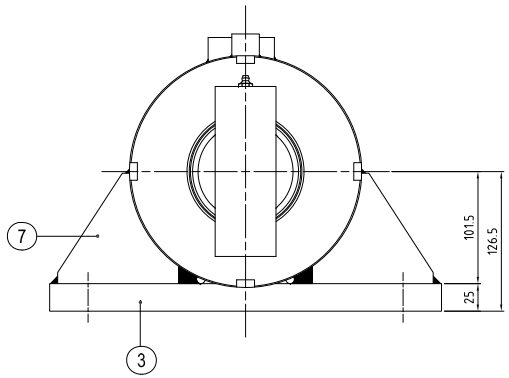

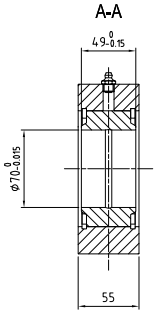

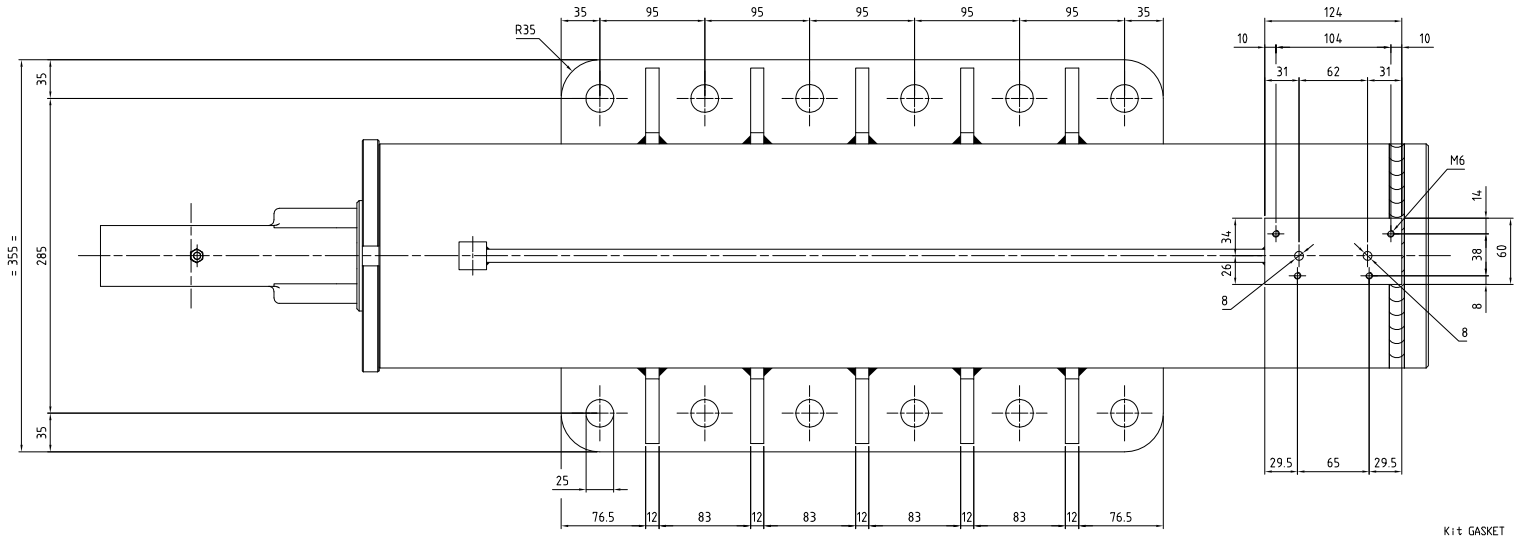

WORKING PRESSURE 160 bar (thrust and traction)

Kit GASKET	
Scraper	-
Piston rod seal	-
S.ed piston rod seal	-
OR+BRS head	-
corner OR	-
piston OR	-
Cylinder seal	-
S.ed cylinder seal	-
any other	-
any other	-
any other	-

Pos.	Denomination	Pieces	Material	Mass. Kg.	Note
12	SCREW M10x20	1	8.8		UNI 5923
11	HAED	1	S355J2G3 EN10025-1		OR:S355J0 EN10025-1
10	TERMINAL BALL JOINT	1			
9	PISTON ROD	1	S355J2G3 EN10025-1		OR:42crMo4 UNI7845 OR:39NiCrMo3 UNI7845 OR:A350LF2
8	PISTON	1	S355J2G3 EN10025-1		OR:S355J0 EN10025-1
7	PLATE TH.12	10	S355J2G3 EN10025-1		OR:S355J0 EN10025-1
6	BOSS	1	S235JR EN10025-1		OR:S275JR EN10025-1
5	PIPE	1	St.37.4		
4	BASE FOR VALVE VBSO-DE-NN-FCB 05,42,28-X-02-Z	1	S235JR EN10025-1		OR:S275JR EN10025-1
3	PLATE TH.25	1	S355J2G3 EN10025-1		OR:S355J0 EN10025-1
2	BOTTOM	1	S355J2G3 EN10025-1		OR:S355J0 EN10025-1
1	BARREL (E.D.203 TH.14.2)	1	S355J2H EN10210		OR:E355 EN10297

marine equipment
PELLEGRINI
Via E. Torricelli 2/A - 37135 VERONA-ITALY

ALLOWANCES NOT INDICATED

Melden parts	
Worked parts	
Length	
Diameter	

Drawn: Speri Paride 13/05/11 — ENGR/DSGN
Checked — Approved

Group 250 — Class. GN 25/25 DH 1064, 1065
Denomination CYLINDER FOR SLEW RING REPLACEMENT
SCALE 1:2.5
Material: --
Model Nr.
Mass Kg. 195
Quantity 4
Treatment
SH. 1 OF 1
N°250/1133
File 2501133-A
Index
MOD. PROGT004REP

Is strictly forbidden reproduce or trasmit to others the object of the present drawing

marine equipment
PELLEGRINI

LOAD CHART
OFFSHORE CRANE TYPE GN 25/25 DH

ANGLE	RADIUS (m)	LOAD MAIN HOOK [tonnes]							
		OFFBOARD LIFTS	OFFBOARD LIFTS						
		OFFBOARD LIFTS	Shift 0.5m	Shift 1.0m	Shift 1.5m	Shift 2.0m	Shift 2.5m	Shift 3.0m	Shift 3.5m	Shift 4.0m
81.4°	9.25	25.0	25.0	25.0	25.0	25.0	25.0	20.0	14.0	10.0
78.9°	11.0	25.0	25.0	25.0	25.0	25.0	25.0	20.0	14.0	10.0
76.4°	13.0	25.0	25.0	25.0	25.0	25.0	25.0	20.0	14.0	10.0
73.7°	15.0	25.0	25.0	25.0	25.0	25.0	25.0	20.0	14.0	10.0
71.1°	17.0	25.0	25.0	25.0	25.0	25.0	25.0	20.0	14.0	10.0
68.3°	19.0	25.0	25.0	25.0	25.0	25.0	25.0	20.0	14.0	10.0
65.5°	21.0	25.0	25.0	25.0	25.0	25.0	25.0	20.0	14.0	10.0
62.7°	23.0	25.0	25.0	25.0	25.0	25.0	25.0	20.0	14.0	10.0
59.9°	25.0	25.0	25.0	25.0	25.0	25.0	25.0	20.0	14.0	10.0
56.6°	27.0	25.0	25.0	25.0	25.0	24.6	23.0	18.5	13.5	9.5
53.6°	29.0	25.0	25.0	25.0	25.0	22.8	21.0	17.0	12.8	9.0
50.4°	31.0	25.0	25.0	25.0	23.0	20.8	19.0	15.8	11.6	8.4
47.0°	33.0	23.7	23.7	23.2	21.1	18.7	17.2	14.7	11.0	7.8
43.2°	35.0	21.5	21.5	21.0	19.3	17.2	15.8	13.9	10.2	7.2
39.4°	37.0	19.8	19.8	19.2	17.5	15.7	14.3	12.8	9.5	6.5
35.0°	39.0	18.5	18.5	18.0	16.1	14.2	13.0	11.6	8.8	6.2
30.3°	41.0	16.2	16.2	15.8	14.2	13.1	12.0	10.5	8.2	5.9
24.6°	43.0	15.0	15.0	14.5	13.4	12.1	11.0	9.6	7.4	5.5
19.4°	44.5	14.0	14.0	13.5	12.5	11.0	10.0	8.8	6.8	5.3
12.0°	46.0	13.0	13.0	12.0	11.0	9.5	9.0	8.2	6.5	5.0

ANGLE [°]	RADIUS (m)	LOAD AUXILIARY HOOK [tonnes]								
		OFFBOARD LIFTS	OFFBOARD LIFTS							
		OFFBOARD LIFTS	Shift 0.5m	Shift 1.0m	Shift 1.5m	Shift 2.0m	Shift 2.5m	Shift 3.0m	Shift 3.5m	Shift 4.0m
81.4°	10.2	7.5	7.5	7.5	7.5	7.5	7.5	6.0	5.5	4.5
78.9°	12.1	7.5	7.5	7.5	7.5	7.5	7.5	6.0	5.5	4.5
76.4°	14.1	7.5	7.5	7.5	7.5	7.5	7.5	6.0	5.5	4.5
73.7°	16.2	7.5	7.5	7.5	7.5	7.5	7.5	6.0	5.5	4.5
71.1°	18.2	7.5	7.5	7.5	7.5	7.5	7.5	6.0	5.5	4.5
68.3°	20.3	7.5	7.5	7.5	7.5	7.5	7.5	5.5	5.0	4.0
65.5°	22.4	7.5	7.5	7.5	7.5	7.5	7.5	5.5	5.0	4.0
62.7°	24.5	7.5	7.5	7.5	7.5	7.5	7.5	5.5	5.0	4.0
59.9°	26.5	7.5	7.5	7.5	7.5	7.5	7.5	5.5	5.0	4.0
56.6°	28.7	7.5	7.5	7.5	7.5	7.5	7.5	5.5	5.0	4.0
53.6°	30.6	7.5	7.5	7.5	7.5	7.5	7.5	5.5	5.0	4.0
50.4°	32.7	7.5	7.5	7.5	7.5	7.5	7.5	5.5	5.0	4.0
47.0°	34.7	7.5	7.5	7.5	7.5	7.5	7.5	5.0	4.0	3.5
43.2°	36.9	7.5	7.5	7.5	7.5	7.5	7.5	5.0	4.0	3.5
39.4°	39.8	7.5	7.5	7.5	7.5	7.5	7.5	5.0	4.0	3.5
35.0°	41.0	7.5	7.5	7.5	7.5	7.5	7.5	5.0	4.0	3.5
30.3°	42.9	7.5	7.5	7.5	7.5	7.5	7.5	5.0	4.0	3.5
24.6°	45.0	7.5	7.5	7.5	7.5	7.5	7.5	4.5	4.0	3.5
19.4°	46.5	7.5	7.5	7.5	7.5	7.5	7.5	4,5	4.0	3.5
12.0°	48.0	7.5	7.5	7.5	7.5	7.5	7.5	4.5	4.0	3.5

LOAD AUXILIARY HOOK – Handling Personnel [tonnes]								
12.0°÷81.4° at all radius	Shift 0.5m	Shift 1.0m	Shift 1.5m	Shift 2.0m	Shift 2.5m	Shift 3.0m	Shift 3.5m	Shift 4.0m
	2.0	2.0	1.8	1.7	1.5	1.4	1.0	0.8

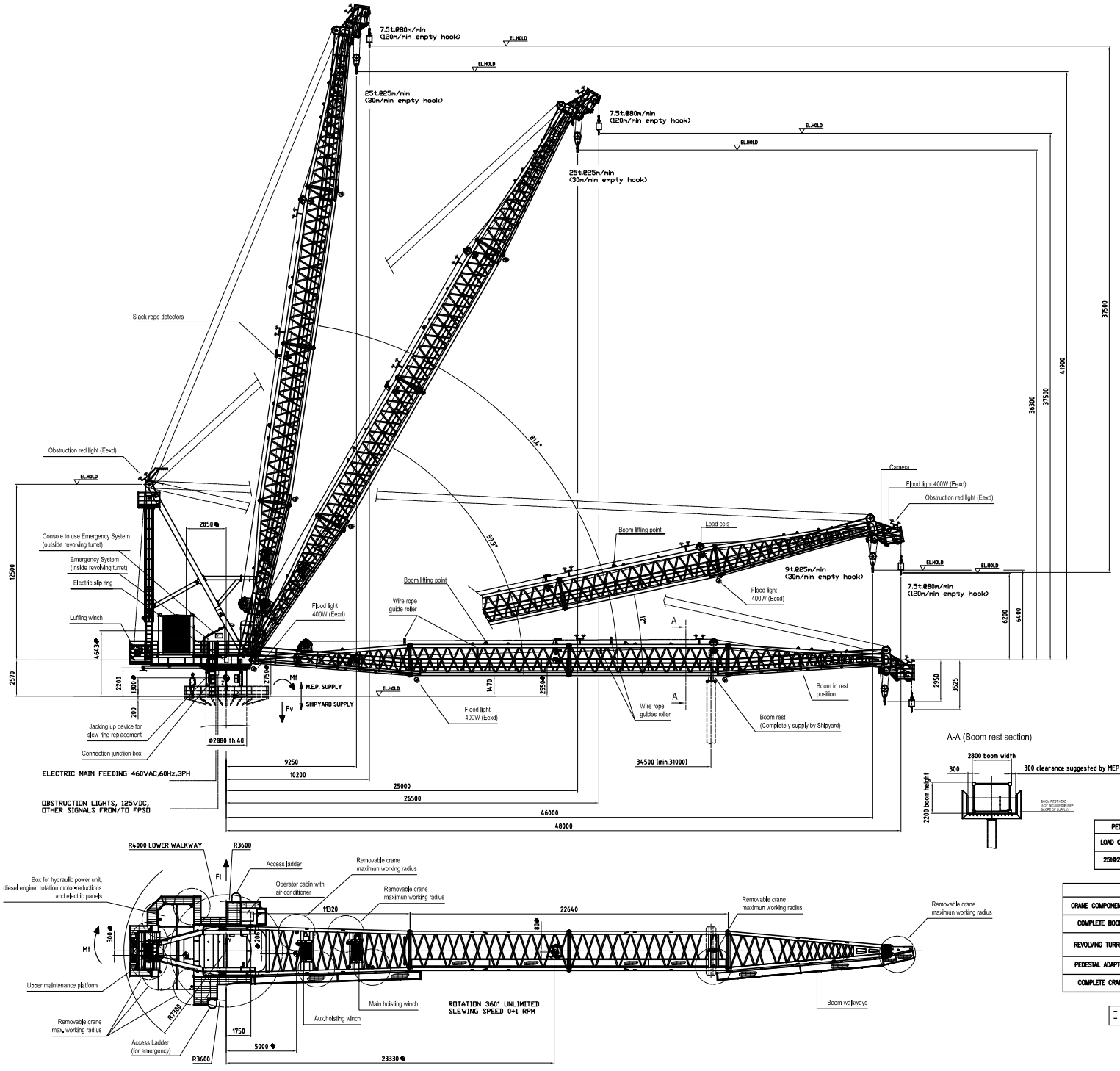

CRITICAL COMPONENTS LIST

CRITICAL MECHANICAL COMPONENTS

- all linkage between the hubs coated elements and the component to be controlled
- Slewing links and gears system
- Slew bearing and fasteners
- Hoisting winches components: drum, shaft and reduction gear box

CRITICAL MECHANICAL COMPONENTS

- Boom elements: chords and facings
- Boom parts connection: flanges and fasteners
- Boom foot plate
- Boom jib members and fasteners
- A- frame members and connection pins
- Revolving turret members
- Pedestal collumn and connection welding

CRITICAL RIGGING COMPONENTS

- Hoisting wire ropes
- Boom Luffing wire rope
- Hook block assembly and overhaul ball
- Wire rope termination (wedge socket Crosby type)
- Sheaves shaft

ENVIRONMENTAL CONDITIONS:

WIND VELOCITY (10m above sea level)
OPERATING CONDITION 65 km/h - 35 knots
STORAGE CONDITION 93 km/h - 50 knots

ENVIRONMENT AIR TEMPERATURE
MINIMUM +5° C
MAXIMUM +50° C

AIR RELATIVE HUMIDITY
MAXIMUM 99%

AIR QUALITY
HIGHLY CORROSIVE MARINE CLIMATE
HUMIDITY-SALTY

SITE ELEVATION
SEA LEVEL

CRANE IS ABLE TO PERFORM THE MAXIMUM LIFTS FROM SUPPLY VESSEL WITH SEA STATE 4-5 OF BEAUFORT SCALE, AS FOLLOW:

-SIGNIFICANT WAVE HEIGHT: 2.5m
-WAVE PERIOD: 5.4s
-OFFLEAD/SIDELEAD ANGLES: 3°/2°AS MINIMUM

FOR SIGNIFICANT WAVE HEIGHT FROM 2.5m UNTIL 4m THE RELEVANT SAFE WORKING LOADS ARE DE-RATED IN ACCORDANCE WITH API 2C LAST EDITION.

PEDESTAL MAXIMA REACTIONS (at limit of MEP supply)				
LOAD CASE	Mf [kNm]	Fv [kN]	Mt [kNm]	Fl [kN]
25t@25m	31500	1900	2350	360

MAIN COMPONENTS CENTER OF GRAVITY				
CRANE COMPONENT	X [mm]	Y [mm]	Z [mm]	Weight [kg]
COMPLETE BOOM	23300	-80	2550	30250
REVOLVING TURRET	-2850	-300	4643	66150
PEDESTAL ADAPTOR	0	0	1300	9000
COMPLETE CRANE	5000	-206	2750	105400

- Boom hazardous area zone 2,IIA,T3
- Revolving turret and winches: safe area

DELIVERED GOODS ARE SUITABLE TO A MAXIMUM STORAGE PERIOD OF 3 MONTHS.
FOR LONGER STORAGE TIME REFER TO THE USER'S MANUAL.

Index	Date	Initial	MODIFICATION
A	04.11.10	MC	UPDATED LOAD CHART
B	05.11.10	SP	UPDATED
C	05.11.10	SP	UPDATED
D	31.05.11	MC	UPDATED WITH PRAV COMMENTS RECEIVED BY GE-PA/PAG-AP-0090
E	31.05.11	MC	UPDATED WITH PRAV COMMENTS RECEIVED BY GE-PA/PAG-LC-0043

REV.	DESCRIPTION	DATE	DWG.	CHECK	APPR.
B					
A	ORIGINAL FOR APPROVAL	5-nov	PE	MC	GB
0	ORIGINAL ISSUE / FOR APPROVAL	5-nov	PE	MC	GB

THIS DOCUMENTS IS PROPERTY OF PETROBRAS AND IT IS PROTECTED IN ACCORDANCE WITH PREVAILING LAW IT SHALL ONLY BE USED FOR THE PURPOSE IT IS DELIVERED STANDARDIZED FORM BY N-381 OR PETROBRAS REV. F

marine equipment
PELLEGRINI
Via E. Torricelli 8/A - 37135 VERONA-ITALY

THIS No 03-0966804/0 | ORIG. CODE: ADDH
File N°: I-DE-001670-0966-609-L.G-000_A
VSR Codice: I-DE-001670-0966-609-L.G-000

PETROBRAS | ENGENHARIA / IEEPT/ICES

CLIENT OR USER: UN-ES / ATP-JUB-CHT

JOB OR PROJECT: NORTE DO PARQUE DAS BALEIAS FIELD DEVELOPMENT

AREA OR UNIT: PETROBRAS 58 (P-58)

DRAWING TITLE: GENERAL LAYOUT DRAWING

DESIGN BY:	DRAWN BY:	CHECKED BY:	APPROVED BY:
SCALE:	DRAWING TYPE:	CD: ---	SHEET 1 OF
DATE:	PROV N°:	PROV NUMBER:	

Pos.	Denomination	Pieces	Material	Mass Kg.	Note

marine equipment
PELLEGRINI
Via E. Torricelli 8/A - 37135 VERONA-ITALY

Group 151 Class GN 25/25 DH

ALLOWANCES NOT INDICATED

Welden parts	
Bolted parts	
Length	
Diameter	

Denomination: SKETCH AND DIMENSION OFFSHORE CRANE TYPE GN25/25 DH

SCALE 1: 100

Material | Model Nr. | Mass Kg.

Quantity: /

Treatment

SH. 1 OF 1

N°151/1769

Drawn	ENGR/DSGN
M. C. 10/03/10	
Checked	Approved

File 5511769EA Index A B C D E

Is strictly forbidden reproduce or transmit to others the object of the present drawing

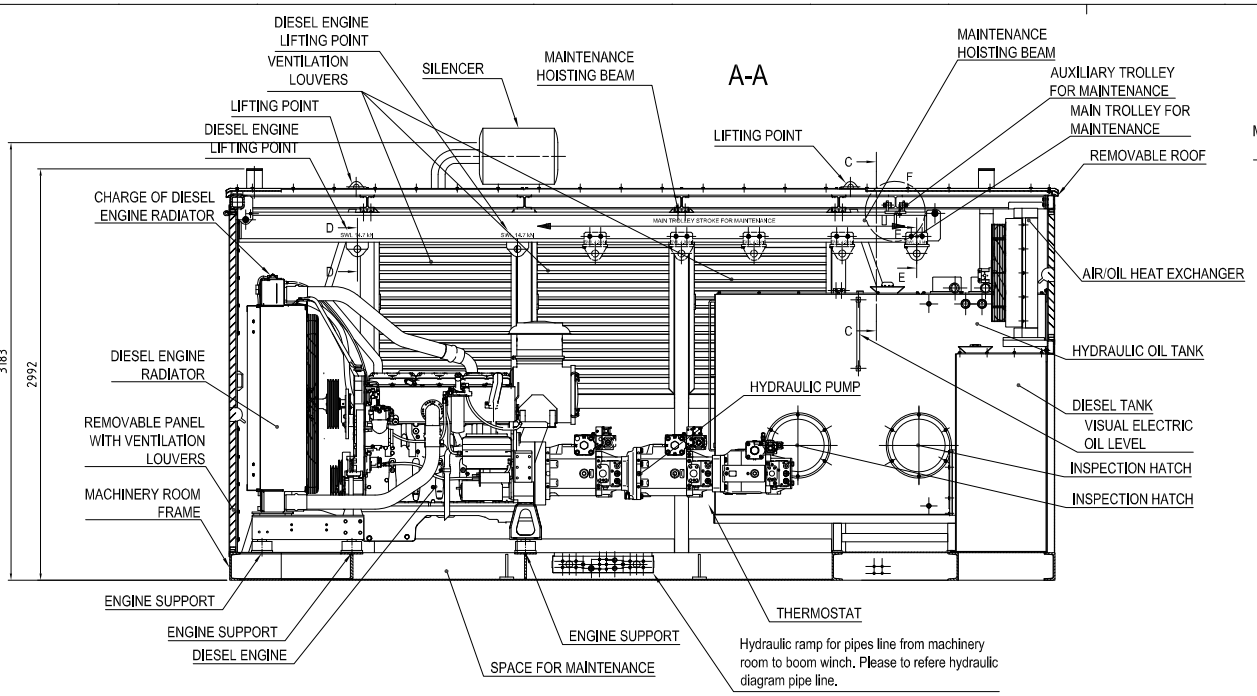

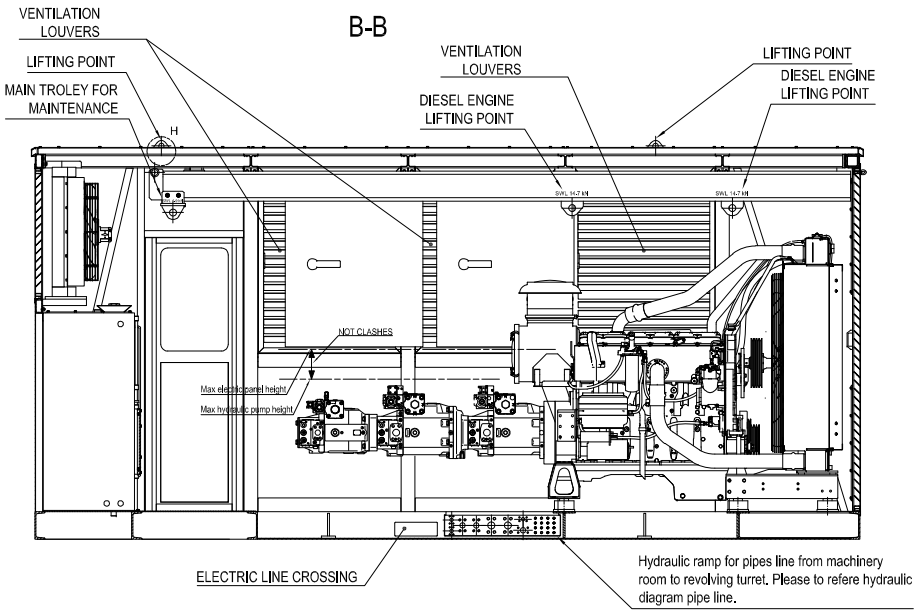

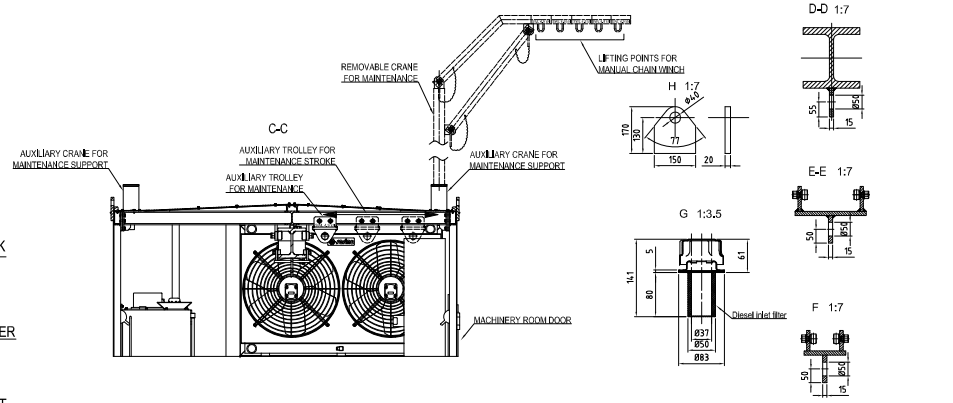

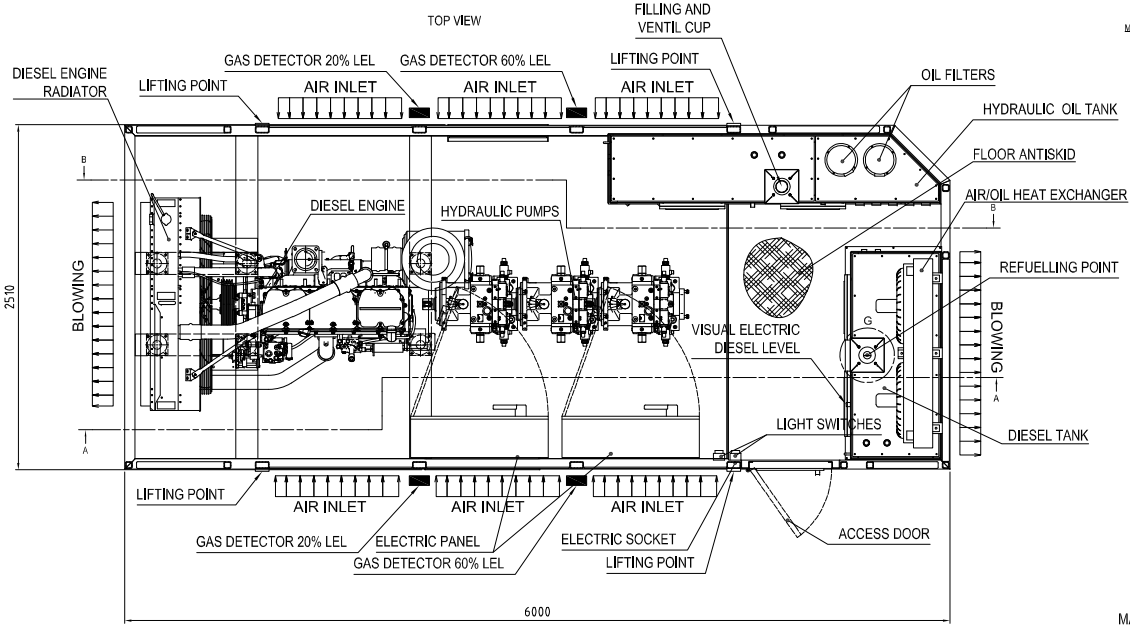

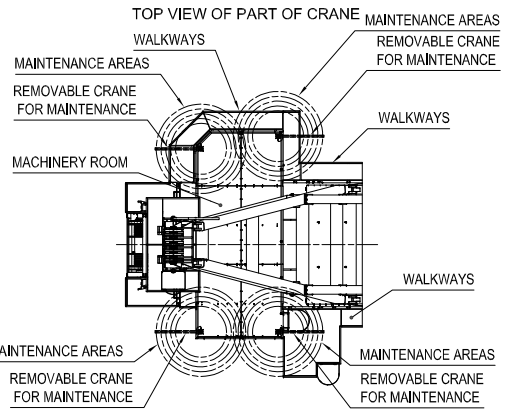

Index	Date	Initial	MODIFICATION
A	09-03-11	S.P.	UPDATED LOAD CHART
B	15/04/2011	P.M.	UPDATED MACHINERY ROOM
C	19/05/2011	P.M.	Changed name layers. Updated machinery room layout
D	12/09/2011	P.M.	Updated machinery room layout

REV.	DESCRIPTION	DATE	ENGR.	CHECK	APPR.
B	Updated in accordance with ASP-PDR-LJS-3025Z	----	P.M.	MC	GS
A	ORIGINAL ISSUE / FOR APPROVAL	----	P.M.	MC	GS

THIS DOCUMENTS IS PROPERTY OF PETROBRAS AND IT IS PROTECTED IN ACCORDANCE WITH PREVAILING LAW IT SHALL ONLY BE USED FOR THE PURPOSE IT IS DELIVERED STANDARDIZE FORM BY N-381 (PETROBRAS) REV. F

marine equipment PELLEGRINI
Via E. Torricelli 8/A - 37135 VERONA-ITALY
TAG 0200460 A/B — SWL (SDB): A2004/A4004
File N°: 3-3E-3010/8-5263-650-LJS-00L.A
VDR Codice: 3-3C-3010/8-5263-650-LJS-00L

BR PETROBRAS — ENGENHARIA / IEEPT/IEES

CLIENT OR USER: UN-ES / ATP-JUB-CHT
JOB OR PROJECT: NORTE DO PARQUE DAS BALEIAS FIELD DEVELOPMENT
AREA OR UNIT: PETROBRAS 58 (P-58)
DRAWING TITLE: MACHINERY ROOM LAYOUT

DESIGN BY:	DRAWN BY:	CHECKED BY:	APPROVED BY:
SCALE:	DRAWING TYPE:	CD ----	SHEET 1 OF 1
DATE:	PNEV N°:	PNEV NUMBER	

Pos.	Denomination	Pieces	Material	Mass Kg	Note

marine equipment PELLEGRINI
Via E. Torricelli 8/A - 37135 VERONA-ITALY
ALLOWANCES NOT INDICATED
Welded parts
Worked parts
Length
Diameter
Drawn: M. Pozzani 12/11/10 — ENGR/DSGN
Checked — Approved

Group 151 — Class GN 25/25 DH
Denomination: MACHINERY ROOM LAYOUT
SCALE 1: 14
Material: ---
Model Nr. — Mass Kg.
Quantity 1
Treatment
File 15118570M
Index A B C D
SH. 1 OF 1
N°151/1857
DWL. NUMBERING

Is strictly forbidden reproduce or transmit to others the object of the present drawing

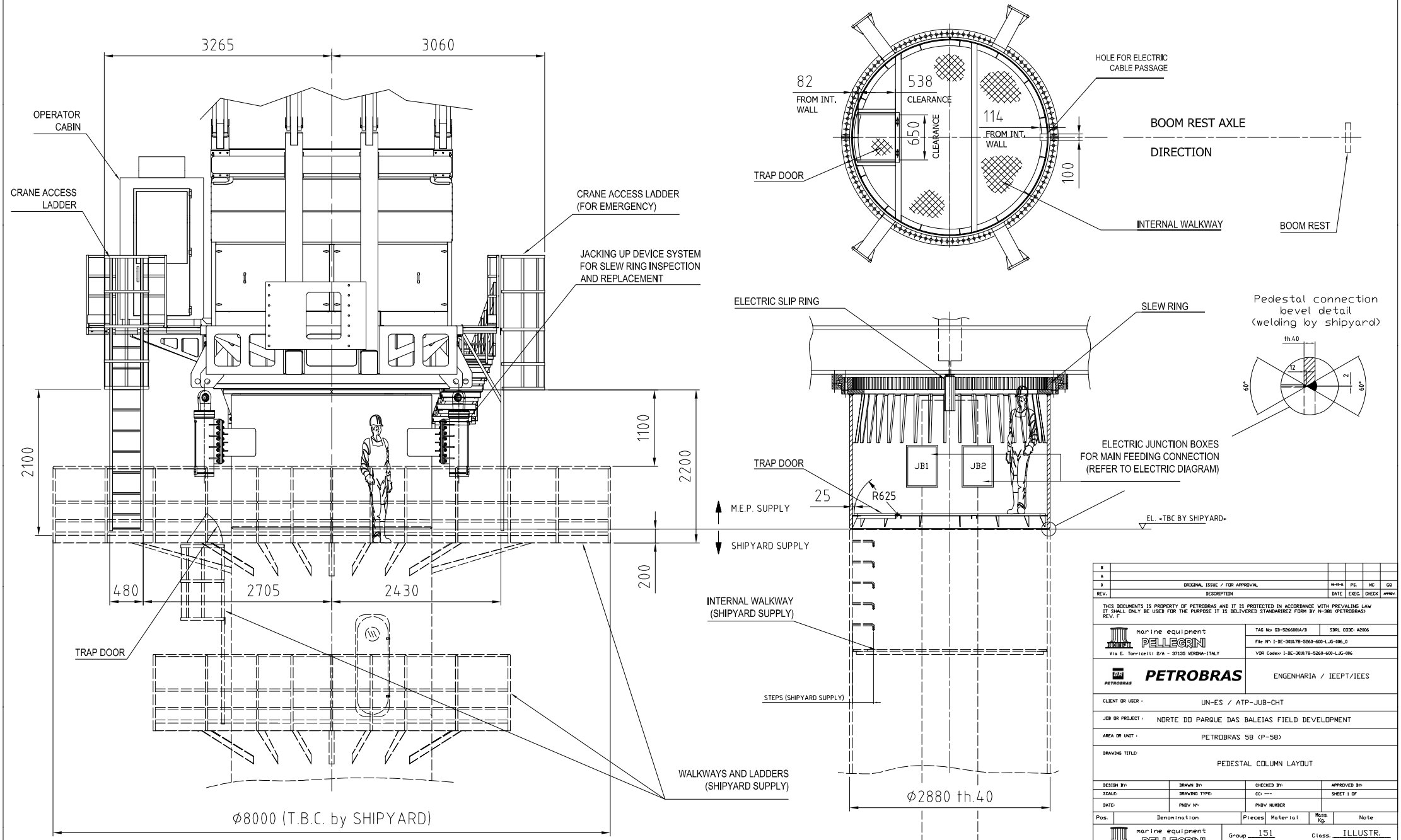

REV.	DESCRIPTION	DATE	EXEC.	CHECK	APPROV.
B					
A					
0	ORIGINAL ISSUE / FOR APPROVAL	06-09-11	PS.	MC	GQ

THIS DOCUMENTS IS PROPERTY OF PETROBRAS AND IT IS PROTECTED IN ACCORDANCE WITH PREVALING LAW IT SHALL ONLY BE USED FOR THE PURPOSE IT IS DELIVERED STANDARIREZ FORM BY N-381 (PETROBRAS) REV. F

marine equipment PELLEGRINI
Via E. Torricelli 2/A - 37135 VERONA-ITALY

TAG No: GD-5266001A/B | SDRL CODE: A2006
File N°: I-DE-3010.78-5260-600-LJG-006_0
VDR Codex: I-DE-3010.78-5260-600-LJG-006

PETROBRAS | ENGENHARIA / IEEPT/IEES

CLIENT OR USER: UN-ES / ATP-JUB-CHT
JOB OR PROJECT: NORTE DO PARQUE DAS BALEIAS FIELD DEVELOPMENT
AREA OR UNIT: PETROBRAS 58 (P-58)
DRAWING TITLE: PEDESTAL COLUMN LAYOUT

DESIGN BY:	DRAWN BY:	CHECKED BY:	APPROVED BY:
SCALE:	DRAWING TYPE:	CC: ---	SHEET 1 OF
DATE:	PNBV N°:	PNBV NUMBER	

Pos.	Denomination	Pieces	Material	Mass. Kg.	Note

marine equipment PELLEGRINI
Via E. Torricelli 2/A - 37135 VERONA-ITALY

Group 151 Class. ILLUSTR.
Denomination SKETCH AND DIMENSIONS COLUMN GN 25/25 DH
SCALE 1:25

ALLOWANCES NOT INDICATED
Melden parts
Worked parts
Length
Diameter

Material --
Model Nr.
Mass Kg. /
Quantity /
SH. 1 OF 1
N° 151/1898
Drawn Speri Paride 03/09/11
ENGR/DSGN
Checked
Approved
Treatment
File 1511898AA
Index
MOD. P000T004MEP A

Is strictly forbidden reproduce or trasmit to others the object of the present drawing

SHIPYARD: PETROBRAS PNBV	CRANE GN 25/25 DH N.1064,1065	ORDER 1720
HULL: P-58		DWG 250/1218

MAIN HOIST		
ITEM	DENOMINATION	EXERCISE LOAD
1	WEDGE SOCKET	66 kN
2	BLOCK ASSEMBLY	254 kN
3	WIRE ROPE	66 kN

ROPE CHARATERISTIC	HOISTING 35x7
DIAMETER	22 mm
MINIMUN BREAKING LOAD	> 342 kN

AUXILIARY HOIST		
ITEM	DENOMINATION	EXERCISE LOAD
4	WEDGE SOCKET	78 kN
5	OVERHAUL BALL	78 kN
6	WIRE ROPE	78 kN

ROPE CHARATERISTIC	HOISTING 35x7
DIAMETER	26 mm
MINIMUN BREAKING LOAD	> 463 kN

BOOM HOIST		
ITEM	DENOMINATION	EXERCISE LOAD
7	WIRE ROPE	72 kN

ROPE CHARATERISTIC	HOISTING 8x36
DIAMETER	26 mm
BREAKING STRENGHT	> 411 kN

DESIGN DATA	
Design temperature	+5°C ÷ +50°C
Wind velocity operating condition	18 m/s
stowage condition	26 m/s

SINGLE SHEAVE EFFICIENCY
μ=0. 98

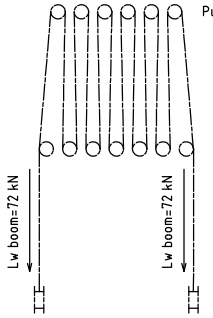

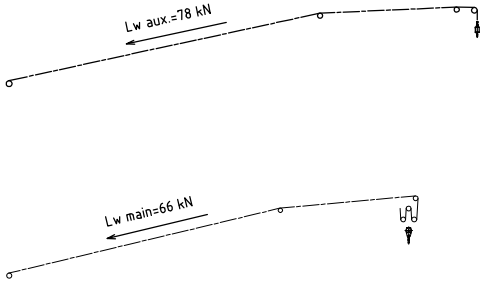

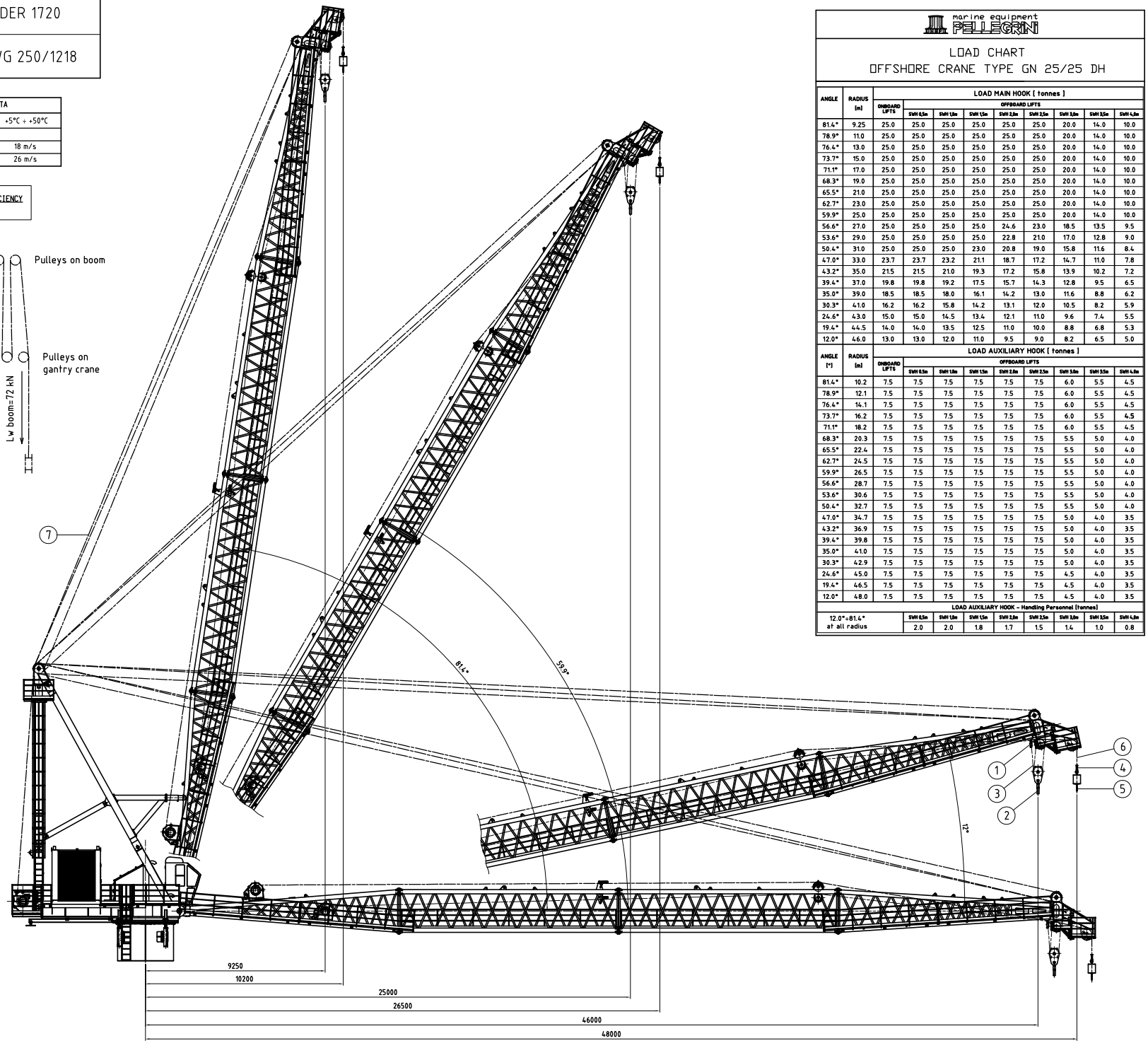

marine equipment PELLEGRINI

LOAD CHART
OFFSHORE CRANE TYPE GN 25/25 DH

ANGLE	RADIUS (m)	LOAD MAIN HOOK [tonnes]								
		ONBOARD LIFTS	OFFBOARD LIFTS							
			SWH 0.5m	SWH 1.0m	SWH 1.5m	SWH 2.0m	SWH 2.5m	SWH 3.0m	SWH 3.5m	SWH 4.0m
81.4°	9.25	25.0	25.0	25.0	25.0	25.0	25.0	20.0	14.0	10.0
78.9°	11.0	25.0	25.0	25.0	25.0	25.0	25.0	20.0	14.0	10.0
76.4°	13.0	25.0	25.0	25.0	25.0	25.0	25.0	20.0	14.0	10.0
73.7°	15.0	25.0	25.0	25.0	25.0	25.0	25.0	20.0	14.0	10.0
71.1°	17.0	25.0	25.0	25.0	25.0	25.0	25.0	20.0	14.0	10.0
68.3°	19.0	25.0	25.0	25.0	25.0	25.0	25.0	20.0	14.0	10.0
65.5°	21.0	25.0	25.0	25.0	25.0	25.0	25.0	20.0	14.0	10.0
62.7°	23.0	25.0	25.0	25.0	25.0	25.0	25.0	20.0	14.0	10.0
59.9°	25.0	25.0	25.0	25.0	25.0	25.0	25.0	20.0	14.0	10.0
56.6°	27.0	25.0	25.0	25.0	25.0	24.6	23.0	18.5	13.5	9.5
53.6°	29.0	25.0	25.0	25.0	25.0	22.8	21.0	17.0	12.8	9.0
50.4°	31.0	25.0	25.0	25.0	23.0	20.8	19.0	15.8	11.6	8.4
47.0°	33.0	23.7	23.7	23.2	21.1	18.7	17.2	14.7	11.0	7.8
43.2°	35.0	21.5	21.5	21.0	19.3	17.2	15.8	13.9	10.2	7.2
39.4°	37.0	19.8	19.8	19.2	17.5	15.7	14.3	12.8	9.5	6.5
35.0°	39.0	18.5	18.5	18.0	16.1	14.2	13.0	11.6	8.8	6.2
30.3°	41.0	16.2	16.2	15.8	14.2	13.1	12.0	10.5	8.2	5.9
24.6°	43.0	15.0	15.0	14.5	13.4	12.1	11.0	9.6	7.4	5.5
19.4°	44.5	14.0	14.0	13.5	12.5	11.0	10.0	8.8	6.8	5.3
12.0°	46.0	13.0	13.0	12.0	11.0	9.5	9.0	8.2	6.5	5.0

ANGLE [°]	RADIUS (m)	LOAD AUXILIARY HOOK [tonnes]								
		ONBOARD LIFTS	OFFBOARD LIFTS							
			SWH 0.5m	SWH 1.0m	SWH 1.5m	SWH 2.0m	SWH 2.5m	SWH 3.0m	SWH 3.5m	SWH 4.0m
81.4°	10.2	7.5	7.5	7.5	7.5	7.5	7.5	6.0	5.5	4.5
78.9°	12.1	7.5	7.5	7.5	7.5	7.5	7.5	6.0	5.5	4.5
76.4°	14.1	7.5	7.5	7.5	7.5	7.5	7.5	6.0	5.5	4.5
73.7°	16.2	7.5	7.5	7.5	7.5	7.5	7.5	6.0	5.5	4.5
71.1°	18.2	7.5	7.5	7.5	7.5	7.5	7.5	6.0	5.5	4.5
68.3°	20.3	7.5	7.5	7.5	7.5	7.5	7.5	5.5	5.0	4.0
65.5°	22.4	7.5	7.5	7.5	7.5	7.5	7.5	5.5	5.0	4.0
62.7°	24.5	7.5	7.5	7.5	7.5	7.5	7.5	5.5	5.0	4.0
59.9°	26.5	7.5	7.5	7.5	7.5	7.5	7.5	5.5	5.0	4.0
56.6°	28.7	7.5	7.5	7.5	7.5	7.5	7.5	5.5	5.0	4.0
53.6°	30.6	7.5	7.5	7.5	7.5	7.5	7.5	5.5	5.0	4.0
50.4°	32.7	7.5	7.5	7.5	7.5	7.5	7.5	5.5	5.0	4.0
47.0°	34.7	7.5	7.5	7.5	7.5	7.5	7.5	5.0	4.0	3.5
43.2°	36.9	7.5	7.5	7.5	7.5	7.5	7.5	5.0	4.0	3.5
39.4°	39.8	7.5	7.5	7.5	7.5	7.5	7.5	5.0	4.0	3.5
35.0°	41.0	7.5	7.5	7.5	7.5	7.5	7.5	5.0	4.0	3.5
30.3°	42.9	7.5	7.5	7.5	7.5	7.5	7.5	5.0	4.0	3.5
24.6°	45.0	7.5	7.5	7.5	7.5	7.5	7.5	4.5	4.0	3.5
19.4°	46.5	7.5	7.5	7.5	7.5	7.5	7.5	4.5	4.0	3.5
12.0°	48.0	7.5	7.5	7.5	7.5	7.5	7.5	4.5	4.0	3.5

LOAD AUXILIARY HOOK - Handling Personnel [tonnes]								
12.0°÷81.4° at all radius	SWH 0.5m	SWH 1.0m	SWH 1.5m	SWH 2.0m	SWH 2.5m	SWH 3.0m	SWH 3.5m	SWH 4.0m
	2.0	2.0	1.8	1.7	1.5	1.4	1.0	0.8

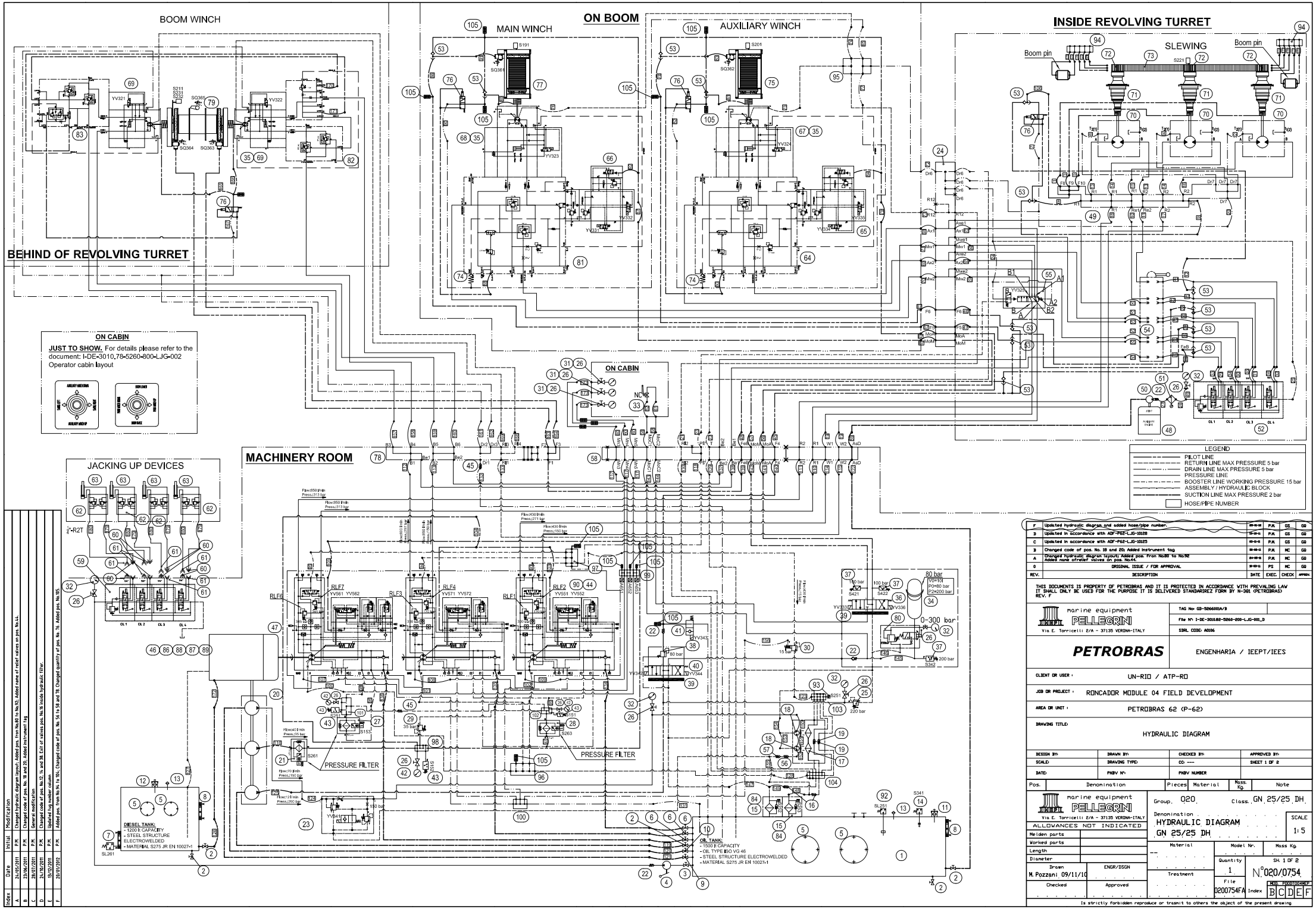

REV.	DESCRIPTION	DATE	EXEC.	CHECK	APPROV.
F	Updated hydraulic diagram and added hose/pipe number.	20-12-11	P.M.	GS	GQ
D	Updated in accordance with ADF-P62-LJG-10128	19-10-11	P.M.	GS	GQ
C	Updated in accordance with ADF-P62-LJG-10125	03-11-11	P.M.	GS	GQ
B	Changed code of pos. No. 18 and 20; Added instrument tag	20-09-11	P.M.	NC	GQ
A	Changed hydraulic diagram layout; Added pos. from No.80 to No.92 Added name of relief valves on pos. No.44.	24-05-11	P.M.	NC	GQ
0	ORIGINAL ISSUE / FOR APPROVAL	30-03-11	PS	NC	GQ

THIS DOCUMENTS IS PROPERTY OF PETROBRAS AND IT IS PROTECTED IN ACCORDANCE WITH PREVALING LAW IT SHALL ONLY BE USED FOR THE PURPOSE IT IS DELIVERED STANDARIREZ FORM BY N-381 (PETROBRAS) REV. F

marine equipment PELLEGRIN
Via E. Torricelli 2/A - 37135 VERONA-ITALY

TAG No: GD-5266001A/B
File N°: I-DE-3010.82-5260-200-LJG-001_D
SDRL CODE: A0106

PETROBRAS ENGENHARIA / IEEPT/IEES

CLIENT OR USER: UN-RIO / ATP-RO
JOB OR PROJECT: RONCADOR MODULE 04 FIELD DEVELOPMENT
AREA OR UNIT: PETROBRAS 62 (P-62)
DRAWING TITLE: HYDRAULIC DIAGRAM

DESIGN BY:	DRAWN BY:	CHECKED BY:	APPROVED BY:
SCALE:	DRAWING TYPE:	CC: ---	SHEET 1 OF 2
DATE:	PKBV N°:	PKBV NUMBER	

Pos.	Denomination	Pieces	Material	Mass. Kg.	Note

marine equipment PELLEGRIN
Via E. Torricelli 2/A - 37135 VERONA-ITALY

Group. 020 Class. GN 25/25 DH
Denomination HYDRAULIC DIAGRAM GN 25/25 DH
SCALE 1:5

ALLOWANCES NOT INDICATED
Melden parts
Worked parts
Length
Diameter

Material --
Model Nr.
Mass Kg.
Quantity 1
SH. 1 OF 2
N°020/0754
Drawn M. Pozzani 09/11/10
ENGR/DSGN
Treatment
File 0200754FA
Index B C D E F
Checked
Approved

Is strictly forbidden reproduce or trasmit to others the object of the present drawing

Index	Date	Initial	Modification
A	24/05/2011	P.M.	Changed hydraulic diagram layout; Added pos. from No.80 to No.92; Added name of relief valves on pos. No.44.
B	23/06/2011	P.M.	Changed code of pos. No. 18 and 20; Added instrument tag
C	28/07/2011	P.M.	General modification
D	24/10/2011	P.M.	Changed code of pos. No.12, 14 and 38. Exit of valves pos. No.16 inside hydraulic filter.
E	13/12/2011	P.M.	Updated tug number column
F	20/01/2012	P.M.	Added pos. from No.94 to 104; Changed code of pos. No. 56 to 58 and 78. Changed quantity of pos. No. 76. Added pos. No.105.

REV.	DESCRIPTION	DATE	EXEC.	CHECK	APPROV.
B	Updated in accordance with ADF-P&D-0025	31-05-11	P.M.	GS	GD
C	Updated in accordance with ADF-P&D-0025	06-06-11	P.M.	GS	GD
D	Changed code of pos. No. 12 and 20; Added instrument tag.	31-08-11	P.M.	MC	GD
A	Changed hydraulic diagram layout; Added pos. from No.88 to No.98; Added note after rev. No.4	24-05-11	P.M.	MC	GD
0	ORIGINAL ISSUE / FOR APPROVAL	31-03-11	PS	MC	GD

THIS DOCUMENTS IS PROPERTY OF PETROBRAS AND IT IS PROTECTED IN ACCORDANCE WITH PREVAILING LAW IT SHALL ONLY BE USED FOR THE PURPOSE IT IS DELIVERED STANDARDIZE FORM 01 N-381 (PETROBRAS) REV. F

marine equipment
PELLEGRINI
Via E. Torricelli 2/A - 37135 VERONA-ITALY

TAG No: GS-5266100A/B
File N°: I-DE-3031.02-5266-200-LJS-001_D
SIRL CODD A8186

PETROBRAS — ENGENHARIA / IEEPT/IEES

CLIENT OR USER: UN-RIO / ATP-RO

JOB OR PROJECT: RONCADOR MODULE 04 FIELD DEVELOPMENT

AREA OR UNIT: PETROBRAS 62 (P-62)

DRAWING TITLE: HYDRAULIC DIAGRAM

DESIGN BY:	DRAWN BY:	CHECKED BY:	APPROVED BY:
SCALE:	DRAWING TYPE:	CD: ——	SHEET 1 OF 2
DATE:	PROV Nº:	PROV NUMBER	

Index	Date	Initial	Modification
A	24/05/2011	P.M.	Changed hydraulic diagram layout; Added pos. from No.88 to No.98; Added note after rev. No.4
B	31/05/2011	P.M.	Changed code of pos. No. 12 and 20; Added instrument tag.
C	06/06/2011	P.M.	Generic modification
D	24/10/2011	P.M.	Changed code of pos. No.12, 14 and 18; Eliminated valves pos. No.14 inside hydraulic filter.
E	13/12/2011	P.M.	Updated tag number column

PRESSURE/FLOW TABLE

UTILIZATION	PRESSURE [bar]	FLOW [l/min]	Main line material / Maker
MAIN WINCH UP	≈ 271	≈ 430	GOLDENSPR/ 450+EN 856 4SH/ MANULI
MAIN WINCH DOWN	≈ 150	≈ 430	GOLDENSPR/ 450+EN 856 4SH/ MANULI
AUXILIARY WINCH UP	≈ 271	≈ 430	GOLDENSPR/ 450+EN 856 4SH/ MANULI
AUXILIARY WINCH DOWN	≈ 150	≈ 430	GOLDENSPR/ 450+EN 856 4SH/ MANULI
ROTATION	≈ 313	≈ 850	GOLDENSPR/ 450+EN 856 4SH/ MANULI
BOOM WINCH UP	≈ 297	≈ 850	GOLDENSPR/ 450+EN 856 4SH/ MANULI
BOOM WINCH DOWN	≈ 150	≈ 690	GOLDENSPR/ 450+EN 856 4SH/ MANULI
BOOSTER LINE	≈ 15	≈ 430	TRACTOR / 1T EN 853 1SN/ MANULI
PILOT LINE	≈ 35	≈ 40	TRACTOR / 1T EN 853 1SN/ MANULI
RETURNE LINE	Max. 5	DIFERENT FLOW RATES	TRACTOR / 1T EN 853 1SN/ MANULI
SUCTION LINE	Max. 2	DIFERENT FLOW RATES	TRACTOR / 1T EN 853 1SN/ MANULI
DRAIN LINE	Max. 5	DIFERENT FLOW RATES	TRACTOR / 1T EN 853 1SN/ MANULI

Instrument tag	Code	Pos.	Denomination	Pieces	Material	Mass. Kg.	Note
TSH-5266107A/B		93	THERMOSTAT	1	FOX		TM45A1
LSL-5266102A/B	56923005	92	ELECTRIC OIL LEVEL	1	GIACOMELLO		LEN 500
		91	FLEXIBLE HYDRAULIC HOSES KIT	1			
		90	PRESSURE HYDRAULIC PUMP TANDEM GASKETS KIT	1			
		89	SPARES KIT FOR DIESEL DIESEL ENGINE SUGGESTED BY MAKER	1			
		88	DIESEL ENGINE AIR FILTER	1			
		87	DIESEL ENGINE FUEL FILTER	1			
		86	DIESEL ENGINE OIL FILTER	1			
		85	MINIMUM SET OF HYDRAULIC HOSES FOR COMMISSIONING	1			
		84	HYDRAULIC OIL RETURN FILTER CARTRIDGE	2	DONALDSON		
	22500959I	83	HYDRAULIC BLOCK WITH OVERCENTER VALVE	1	REXROTH		
	22500959I	82	HYDRAULIC BLOCK WITH OVERCENTER VALVE	1	REXROTH		
	22500959I	81	HYDRAULIC BLOCK WITH OVERCENTER VALVE	1	REXROTH		
	57050049R	80	COCK	1	EPE		B10 M P 250 G3 R P--
YS-5266167A/B - YS-5266170A/B - YS-5266171A/B - YS-5266172A/B - YS-5266174A/B - YS-5266220A/B	20163031	79	BOOM WINCH	1	M.E.P.		See DWG 016/3031
		78	HYDRAULIC BLOCK FOR BRAKES OF ROTATION	1	M.E.P.		
YS-5266166A/B - YS-5266168A/B	20141884	77	MAIN WINCH	1	M.E.P.		See DWG 014/1884
	56910799	76	HYDRAULIC VALVE	4	PARKER		QDS6-G-25-E-O-O
YS-5266165A/B - YS-5266169A/B		75	AUXILIARY WINCH	1	M.E.P.		See DWG 016/3021
	22500959I	74	NOT RETURN VALVE	2	REXROTH		S 20 A2.0/
		73	SLEW BEARING	1	LYC		134.45.3150.03
		72	PINION	3	BREVINI		m=22, z=14, xm=11, au=20°. INTEGRATED ON GEAR BOX
		71	SLEWING GEAR BOX	3	BREVINI		SLS6004DCe/9015709/FL3 50,8C V5
	22500959I	70	HYDRAULIC MOTOR	3	REXROTH		A2FM107/61W-VZB100
XY-5266199A/B - XY-5266200A/B	22500959I	69	HYDRAULIC MOTOR	2	REXROTH		A6VM170EZ600H001H/71 MWV0R4T2200-S
XY-5266201A/B	22500959I	68	HYDRAULIC MOTOR	1	REXROTH		A6VM150EZ600H001H/71 MWV0R4T2100-S
XY-5266202A/B	22500959I	67	HYDRAULIC MOTOR	1	REXROTH		A6VM170EZ600H001H/71 MWV0R4T2100-S
XY-5266205A/B - XY-5266206A/B	22500959I	66	HYDRAULIC BLOCK	1	REXROTH		FIXED ON HYDRAULIC MOTOR
XY-5266208A/B - XY-5266209A/B	22500959I	65	HYDRAULIC BLOCK	1	REXROTH		FIXED ON HYDRAULIC MOTOR
	22520959I	64	HYDRAULIC BLOCK WITH OVERCENTER	1	REXROTH		
		63	HYDRAULIC CYLINDER	4	M.E.P.		See DWG
	56910407	62	HYDRAULIC VALVE	4	OIL CONTROL		05.42.48-30-02-35 VBSO-DE-NN-FCB
	57040102	61	HYDRAULIC CONNECTION FEMALE	8	FASTER		NVF 1/4" + TF 1/4"
	57040060	60	HYDRAULIC CONNECTION MALE	8	FASTER		NVM 1/4" + TM 1/4"
	56913690	59	HYDRAULIC DISTRIBUTOR	1	WALVOIL		SD5/4 211x4L
	22500959I	58	BASE FOR SOLENOID VALVE	1	REXROTH		G 342/01
	22500959I	57	BASE FOR SOLENOID VALVE	1	REXROTH		NOZZLE 1.5-7-M8X1-ST
XY-5266204A/B	22500959I	56	SOLENOID VALVE	1	REXROEH		4WE 6 C6X/EG24N9K4
XY-5266203A/B	22500959I	55	SOLENOID VALVE	1	REXROTH		MH6WW 32 AG2X/L4AG24C4M11
	56921016	54	HYDRAULIC CONNECTION	1	FASTER		MULTIFASTER 8
	56910858	53	SHUTTLE VALVE	12	OLEOSTAR		VT 14
	56913693	52	HYDRAULIC DISTRIBUTOR	1	WALVOIL		SD5/4-P (KG3-150)/28L/28L/28L/28L /AET
	56925313	51	HYDRAULIC FILTER	1	MP FILTRI		FHP 135-1 BAG1A25 NVM
	57000144	50	HYDRAULIC PUMP	1	SAUER		SNP 2/11 D C001
		49	HYDRAULIC BLOCK FOR ROTATION	2	M.E.P.		
	56400051	48	AUXILIARY DIESEL ENGINE	1	LOMBARDINI		15LD440
	51007521	47	JOINT	1	CENTA		CENTAFLEX K 200 D
	56403001	46	DIESEL ENGINE	1	CATERPILLAR 470 kW		C18
	22500959I	45	NOT RETURN VALVE	2	REXROTH		S 25 A1.0/
XY-5266131A/B - XY-5266132A/B - XY-5266133A/B -XY-5266134A/B - XY-5266135A/B - XY-5266136A/B - PT-5266196A/B - PT-5266197A/B - PT-5266198A/B	22500959I	44	PRESSURE HYDRAULIC PUMP TANDEM	1	REXROTH		A4CSG500EPD+500EPA+250EPA
PS-5266128A/B - PS-5266129A/B - PS-5266130A/B	56917044	43	PRESSURE SWITCH	3	TELEMECANIQUE		XML070D
PI-5266125A/B - PI-5266126A/B - PI-5266127A/B	56920002	42	MANOMETER	3	WIKA		63 RI 100
XY-5266213A/B	56927201	41	SOLENOID VALVE	1	FLUCOM		ECP 20/22C1-MO+20-LO-B06
XY-5266212A/B - XY-5266214A/B	56927163	40	SOLENOID VALVE	1	REXROTH		4WE6H6X/E G24 N9 K4
	56910326	39	BASE FOR SOLENOID VALVE	2	EUROFLUID		ES3 D 38P
	57000616	38	PRESSURE REDUCING VALVE	1	REXROTH		ZDR6DA2-4X/150Y
PS-5266122A/B - PS-5266123A/B - PS-5266124A/B	56917031	37	PRESSURE SWITCH	3	TELEMECANIQUE		XML 300D
XY-5266207A/B - XY-5266210A/B	56927127	36	SOLENOID VALVE	1	DUPLOMATIC		DS3-S3/10N-D24K1
		35	HYDRAULIC MOTOR GASKETS KIT FOR WINCHES	1			
	57050049	34	HYDRAULIC ACCUMULATOR	1	EPE		AS 10 P 360 C G (NR-13 BRASILIAN)
	56915115	33	COCK	1	FIMMA		AD10
PI-5266117A/B - PI-5266118A/B - PI-5266119A/B - PI-5266120A/B - PI-5266121A/B	56920040	32	MANOMETER	5	WIKA		63 RI 400
PI-5266114A/B - PI-5266115A/B - PI-5266116A/B	56920043	31	MANOMETER	3	WIKA		63 FI 400
	22500959I	30	PRESSURE REDUCING VALVE	1	REXROTH		DB 30 G2-5X/50Y
PSV-5266113A/B	22500959I	29	RELIEF VALVE	1	REXROTH		DBDS 10 G1A/50
PSL-5266112A/B	22500959I	28	HYDRAULIC FILTER	1	REXROTH		100 LEN 0400 H10XL-A00-09V5,0-R0M00
PSL-5266111A/B	22500959I	27	HYDRAULIC FILTER	1	REXROTH		100 LEN 0250 H10XL-A00-09V5,0-R0M00
	56921025	26	MANOMETER EXCLUSOR	11	TOGNELLA		FT 291-14
PSV-5266110A/B	56910536	25	RELIEF VALVE	1	OLEOSTAR		VMP/B/L 05-38 STEEL
	20170059	24	HYDRAULIC BLOCK FOR REVOLVING TURRET	1	M.E.P.		DWG 017/0059
XY-5266211A/B	56917049	23	FLOW REGULATOR WITH SOLENOID VALVE	1	OIL CONTROL		VRFC3-VS10-VEI 24VDC OM.36.03-70-03
	56910450	22	NOT RETURN VALVE	4	FIMMA		CA10
PSL-5266108A/B	22500959I	21	HYDRAULIC FILTER	1	REXROTH		100 LEN 0063 H10XL-A00-09V5,0-R0M00
	57000174	20	PILOT HYDRAULIC PUMP TANDEM	1	SAUER		SNP 3/22 S SC 07+SNP 2/19+SNP 2/4 S SC07 SAE B z13
	22500959I	19	NOT RETURN VALVE	2	REXROTH		S 30 A5.0/
	56400298	18	HYDRAULIC MOTOR	2	SAUER		SEM2/22 R C001
	56913562	17	HEAT EXCHANGER BLOWING	1	SESINO		MRO 02354 BLOWING
	22500959I	16	NOT RETURN VALVE	2	REXROTH		S 30 A3.0/
PSL-5266105A/B - PSL-5266106A/B	56925279	15	LOW PRESSURE FILTER	2	DONALDSON		FIO 800/1+504.05
TSH-5266104A/B		14	THERMOSTAT VARIABLE DEGREE	1	CALEFFI		TG MOD. 7P1 1R 306 00A
	56925163	13	BLEED	2	DONALDSON		FBO FS7
	56920604	12	FILLING AND VENTIL CUP	1	MP FILTRI		TA80 B 10 A 0 L 1 P01
	56920602	11	FILLING AND VENTIL CUP	1	MISELLI		CTR
	56915108	10	COCK	1	MARTINELLI		BP 1"
	56915107	9	COCK	1	MARTINELLI		BP 1"1/4
LCG-5266103A/B - LCG-5266137A/B	56923068	8	VISUAL DIESEL LEVEL	2	GIACOMELLO		LV/T 500 2R12
LSL-5266101A/B	56923082	7	VISUAL ELECTRIC OIL LEVEL C.P.	1	GIACOMELLO		LVE 500 2R12
	56915144	6	COCK	3	MARTINELLI		BP 2"1/2
	56907602	5	INSPECTION COVER	4	OMT		SE 475
HB-5266100A	57000015	4	HAND PUMP	1	OFMB		PM 20
	56915103	3	COCK	1	MARTINELLI		BP 1/2"
	56915102	2	COCK	5	MARTINELLI		BP 3/4"
	22501093	1	HYDRAULIC TANK	1	M.E.P.		See DWG

marine equipment
PELLEGRINI
Via E. Torricelli 2/A - 37135 VERONA-ITALY

ALLOWANCES NOT INDICATED

Melden parts	
Worked parts	
Length	
Diameter	

Drawn	ENGR/DSGN
M. Pozzani 09/11/10	
Checked	Approved

Group 020 — Class GN 25/25 DH

Denomination: HYDRAULIC DIAGRAM GN 25/25 DH

SCALE 1:8

Material	Model Nr.	Mass Kg.
--		

Treatment

Quantity 1

SH. 2 OF 2

N° 020/0754

File 0200754EB

Index A B C D E

MOD. P000T004MEP

Is strictly forbidden reproduce or trasmite to others the object of the present drawing.